General ordering data

Part designation	• SAI-4/6/8 MH-MM BL 3.5
Order No.	• 1724754000
Version	• Metal hood version, plastic gland, screw connection

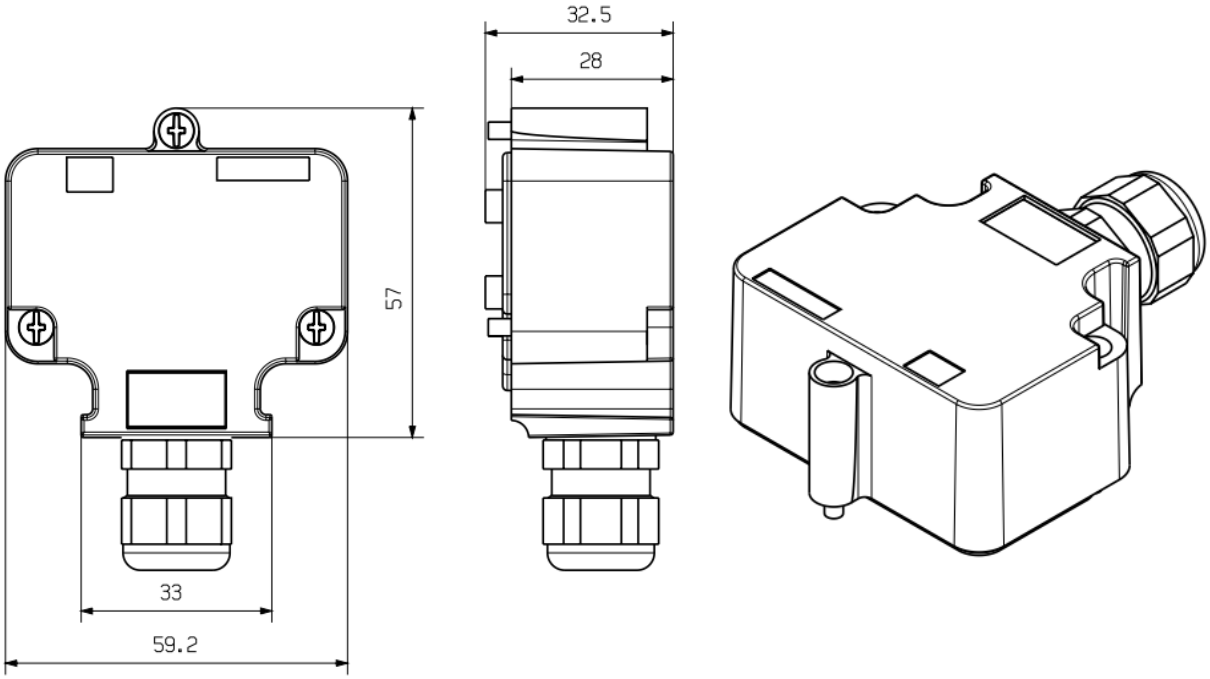

Technical data

Ambient temperature	• -20°C … 80°C
Material housing	• Zinc diecast
Ingress protection class	• IP67/ 68
Nominal voltage	• 10 … 30 V
Total current	• 10 A
Current per signal	• 2 A
Max. Current-carrying capacity per slot	• 4 A
Conductor O.D., min-max.	• 6mm-12mm
Sheathing stripping length	• 100mm
Cable gland	• M20
Clamping range, min.-max.	• 0,08mm²-1.5mm²

General ordering data

Part designation	• SAI-4/6/8-MHF 5P PUR XM
Order No.	• 179146XXXX
Version	• Hood version, fixed cable, Xm

Number	Wire cross sesction in mm²	Color
1	0,34	white
2	0,34	green
3	0,34	yellow
4	0,34	grey
5	0,34	pink
6	0,34	red
7	0,34	black
8	0,34	violett
9	0,34	Grey/pink
10	0,34	Red/blue
11	0,34	White/green
12	0,34	Brown/green
13	0,34	White/yellow
14	0,34	Yellow/brown
15	0,34	White/grey
16	0,34	Grey/brown
17	1	brown
18	1	blue
19	1	red
20	1	black
21	1	Green/yellow