TMS320C6454
Fixed-Point Digital Signal Processor

Check for Samples: TMS320C6454

1 Features

- **High-Performance Fixed-Point DSP (C6454)**
  - **1.39-, 1.17-, and 1-ns Instruction Cycle Time**
  - **720-MHz, 850-MHz, and 1-GHz Clock Rate**
  - **Eight 32-Bit Instructions/Cycle**
  - **8000 MIPS/MMACS (16-Bits)**
  - **Commercial Temperature [0°C to 90°C]**
  - **Extended Temperature [-40°C to 105°C]**
- **TMS320C64x+™ DSP Core**
  - **Dedicated SPLOOP Instruction**
  - **Compact Instructions (16-Bit)**
  - **Instruction Set Enhancements**
  - **Exception Handling**
- **TMS320C64x+ Megamodule L1/L2 Memory Architecture:**
  - **256K-Bit (32K-Byte) L1P Program Cache [Direct Mapped]**
  - **256K-Bit (32K-Byte) L1D Data Cache [2-Way Set-Associative]**
  - **8M-Bit (1048K-Byte) L2 Unified Mapped RAM/Cache [Flexible Allocation]**
  - **256K-Bit (32K-Byte) L2 ROM**
  - **Time Stamp Counter**
- **Endianess: Little Endian, Big Endian**
- **64-Bit External Memory Interface (EMIFA)**
  - **Glueless Interface to Asynchronous Memories (SRAM, Flash, and EEPROM) and Synchronous Memories (SBSRAM, ZBT SRAM)**
  - **Supports Interface to Standard Sync Devices and Custom Logic (FPGA, CPLD, ASICs, etc.)**
  - **32M-Byte Total Addressable External Memory Space**
- **DDR2 Memory Controller**
  - **Interfaces to DDR2-533 SDRAM**
  - **32-Bit/16-Bit, 533-MHz (data rate) Bus**
  - **512M-Byte Total Addressable External Memory Space**
- **EDMA3 Controller (64 Independent Channels)**
- **32-/16-Bit Host-Port Interface (HPI)**
- **32-Bit 33-/66-MHz, 3.3-V Peripheral Component Interconnect (PCI) Master/Slave Interface Conforms to *PCI Local Bus Specification* (v2.3)**
- **One Inter-Integrated Circuit (I^2C) Bus**
- **Two McBSPs**
- **10/100/1000 Mb/s Ethernet MAC (EMAC)**
  - **IEEE 802.3 Compliant**
  - **Supports Multiple Media Independent Interfaces (MII, GMII, RMII, and RGMII)**
  - **8 Independent Transmit (TX) and 8 Independent Receive (RX) Channels**
- **Two 64-Bit General-Purpose Timers, Configurable as Four 32-Bit Timers**
- **16 General-Purpose I/O (GPIO) Pins**
- **System PLL and PLL Controller**
- **Secondary PLL and PLL Controller, Dedicated to EMAC and DDR2 Memory Controller**
- **Advanced Event Triggering (AET) Compatible**
- **Trace-Enabled Device**
- **IEEE-1149.1 (JTAG™) Boundary-Scan-Compatible**
- **697-Pin Ball Grid Array (BGA) Package (CTZ, GTZ, or ZTZ Suffix), 0.8-mm Ball Pitch**
- **0.09-µm/7-Level Cu Metal Process (CMOS)**
- **3.3-/1.8-/1.5-V I/Os, 1.25-/1.2-V Internal**
- **Pin-Compatible with the TMS320C6455 Fixed-Point Digital Signal Processor**

Please be aware that an important notice concerning availability, standard warranty, and use in critical applications of Texas Instruments semiconductor products and disclaimers thereto appears at the end of this data sheet.
All trademarks are the property of their respective owners.

PRODUCTION DATA information is current as of publication date. Products conform to specifications per the terms of the Texas Instruments standard warranty. Production processing does not necessarily include testing of all parameters.

Copyright © 2006–2012, Texas Instruments Incorporated

1.1 CTZ/GTZ/ZTZ BGA Package (Bottom View)

Figure 1-1 shows the TMS320C6454 device 697-pin ball grid array package (bottom view).

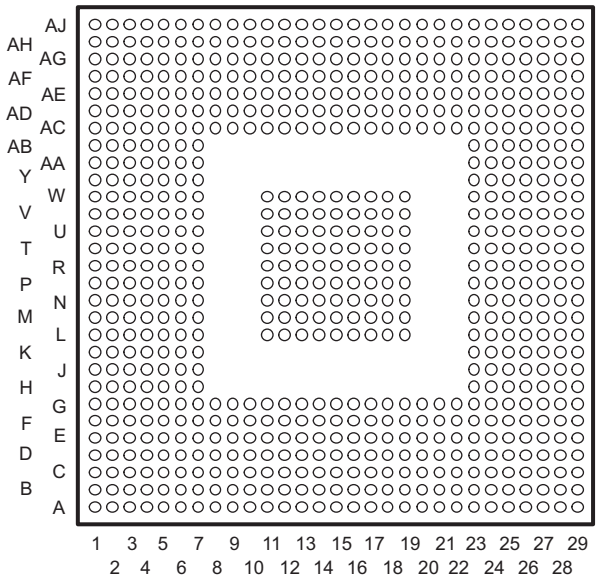

Figure 1-1. CTZ/GTZ/ZTZ BGA Package (Bottom View)

1.2 Description

The TMS320C64x+™ DSPs (including the TMS320C6454 device) are the highest-performance fixed-point DSP generation in the TMS320C6000™ DSP platform. The C6454 device is based on the third-generation high-performance, advanced VelociTI™ very-long-instruction-word (VLIW) architecture developed by Texas Instruments (TI), making these DSPs an excellent choice for applications including video and telecom infrastructure, imaging/medical, and wireless infrastructure (WI). The C64x+™ devices are upward code-compatible from previous devices that are part of the C6000™ DSP platform.

The C6454 device offers a lower cost pin-compatible migration path for C6455 customers who don't need the 2MB of the C6455 or the high-speed interconnect provided by Serial RapidIO. The C6454 device also provides an excellent migration path for existing C6414/6415/6416 customers who require C6454 advanced peripherals; DDR2 at 533 MHz provides 2x performance boost over older SDRAM interface, gigabit Ethernet provides low-cost high-performance ubiquitous packet interface, and 66-MHz PCI (revision 2.3 complaint) provides legacy high-bandwidth interconnect.

Based on 90-nm process technology and with performance of up to 8000 million instructions per second (MIPS) [or 8000 16-bit MMACs per cycle] at a 1-GHz clock rate, the C6454 device offers cost-effective solutions to high-performance DSP programming challenges. The C6454 DSP possesses the operational flexibility of high-speed controllers and the numerical capability of array processors.

The C64x+ DSP core employs eight functional units, two register files, and two data paths. Like the earlier C6000 devices, two of these eight functional units are multipliers or .M units. Each C64x+ .M unit doubles the multiply throughput versus the C64x core by performing four 16-bit x 16-bit multiply-accumulates (MACs) every clock cycle. Thus, eight 16-bit x 16-bit MACs can be executed every cycle on the C64x+ core. At a 1-GHz clock rate, this means 8000 16-bit MMACs can occur every second. Moreover, each multiplier on the C64x+ core can compute one 32-bit x 32-bit MAC or four 8-bit x 8-bit MACs every clock cycle.

Copyright © 2006–2012, Texas Instruments Incorporated

The C6454 DSP integrates a large amount of on-chip memory organized as a two-level memory system. The level-1 (L1) program and data memories on the C6454 device are 32KB each. This memory can be configured as mapped RAM, cache, or some combination of the two. When configured as cache, L1 program (L1P) is a direct mapped cache where as L1 data (L1D) is a two-way set associative cache. The level-2 (L2) memory is shared between program and data space and is 1048KB in size. L2 memory can also be configured as mapped RAM, cache, or some combination of the two. The C64x+ Megamodule also has a 32-bit peripheral configuration (CFG) port, an internal DMA (IDMA) controller, a system component with reset/boot control, interrupt/exception control, a power-down control, and a free-running 32-bit timer for time stamp.

The peripheral set includes: an inter-integrated circuit bus module (I2C); two multichannel buffered serial ports (McBSPs); a user-configurable 16-bit or 32-bit host-port interface (HPI16/HPI32); a peripheral component interconnect (PCI); a 16-pin general-purpose input/output port (GPIO) with programmable interrupt/event generation modes; an 10/100/1000 Ethernet media access controller (EMAC), which provides an efficient interface between the C6454 DSP core processor and the network; a management data input/output (MDIO) module (also part of the EMAC) that continuously polls all 32 MDIO addresses in order to enumerate all PHY devices in the system; a glueless external memory interface (64-bit EMIFA), which is capable of interfacing to synchronous and asynchronous peripherals; and a 32-bit DDR2 SDRAM interface.

The I2C ports on the C6454 device allows the DSP to easily control peripheral devices and communicate with a host processor. In addition, the standard multichannel buffered serial port (McBSP) may be used to communicate with serial peripheral interface (SPI) mode peripheral devices.

The C6454 DSP has a complete set of development tools which includes: a new C compiler, an assembly optimizer to simplify programming and scheduling, and a Windows® debugger interface for visibility into source code execution.

Copyright © 2006–2012, Texas Instruments Incorporated

1.3 Functional Block Diagram

Figure 1-2 shows the functional block diagram of the C6454 device.

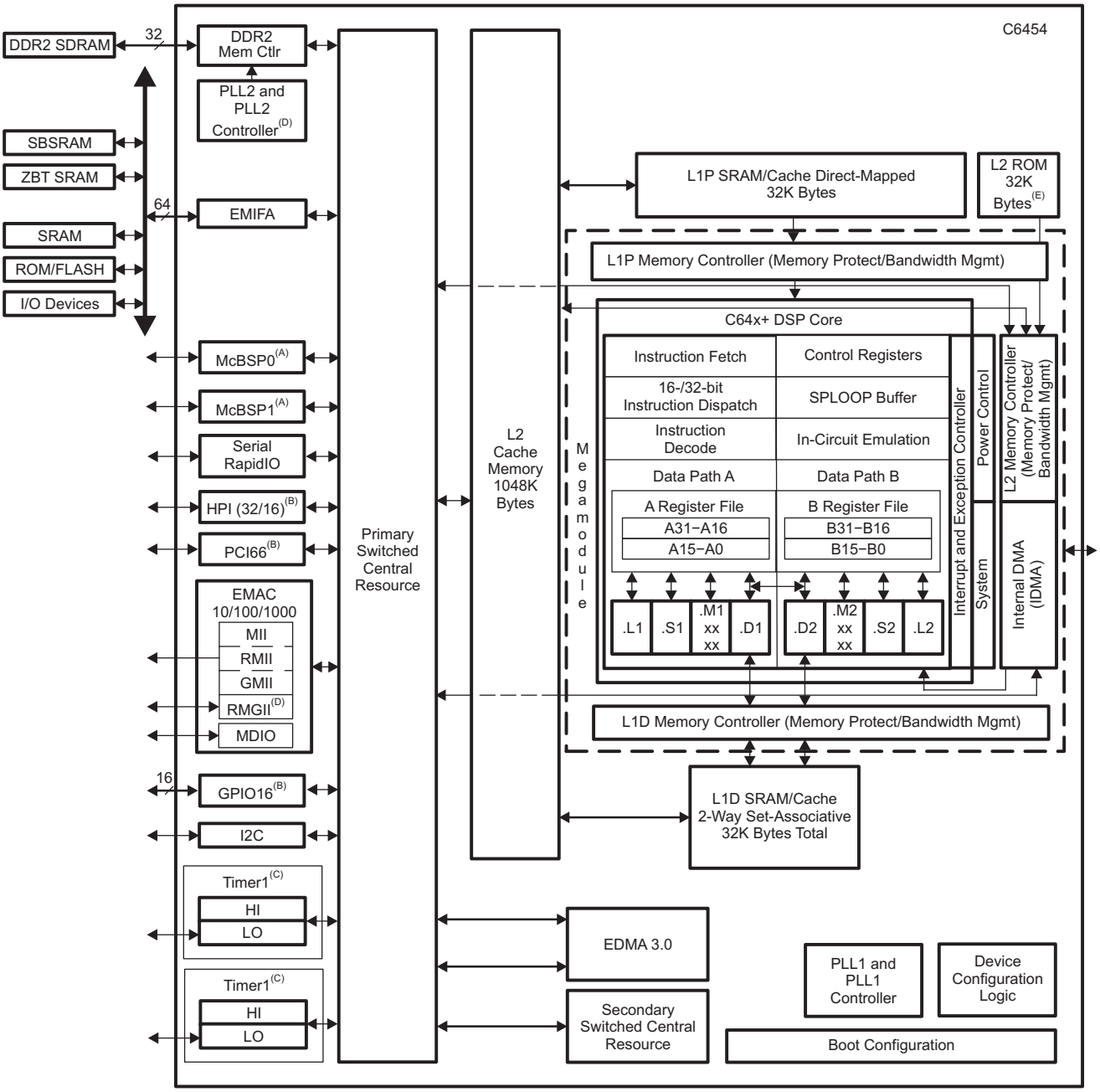

A. McBSPs: Framing Chips - H.100, MVIP, SCSA, T1, E1; AC97 Devices; SPI Devices; Codecs.
B. The PCI peripheral pins are muxed with some of the HPI peripheral pins. For more detailed information, see the *Device Configuration* section.
C. Each of the TIMER peripherals (TIMER1 and TIMER0) is configurable as a 64-bit general-purpose timer, dual 32-bit general-purpose timers, or a watchdog timer.
D. The PLL2 controller also generates clocks for the EMAC.
E. When accessing the internal ROM of the DSP, the CPU frequency must always be less than 750 MHz.

Figure 1-2. Functional Block Diagram

Copyright © 2006–2012, Texas Instruments Incorporated

1 Features **1**
1.1 CTZ/GTZ/ZTZ BGA Package (Bottom View) 2
1.2 Description 2
1.3 Functional Block Diagram 4
Revision History **6**
2 Device Overview **7**
2.1 Device Characteristics 7
2.2 CPU (DSP Core) Description 8
2.3 Memory Map Summary 11
2.4 Boot Sequence 13
2.5 Pin Assignments 15
2.6 Signal Groups Description 19
2.7 Terminal Functions 24
2.8 Development 48
3 Device Configuration **52**
3.1 Device Configuration at Device Reset 52
3.2 Peripheral Configuration at Device Reset 54
3.3 Peripheral Selection After Device Reset 55
3.4 Device State Control Registers 57
3.5 Device Status Register Description 67
3.6 JTAG ID (JTAGID) Register Description 69
3.7 Pullup/Pulldown Resistors 70
3.8 Configuration Examples 70
4 System Interconnect **73**
4.1 Internal Buses, Bridges, and Switch Fabrics 73
4.2 Data Switch Fabric Connections 74
4.3 Configuration Switch Fabric 76
4.4 Bus Priorities 78
5 C64x+ Megamodule **79**
5.1 Memory Architecture 79
5.2 Memory Protection 81
5.3 Bandwidth Management 82
5.4 Power-Down Control 83
5.5 Megamodule Resets 83
5.6 Megamodule Revision 84
5.7 C64x+ Megamodule Register Descriptions 85
6 Device Operating Conditions **93**
6.1 Absolute Maximum Ratings Over Operating Case Temperature Range (Unless Otherwise Noted) 93
6.2 Recommended Operating Conditions 93
6.3 Electrical Characteristics Over Recommended Ranges of Supply Voltage and Operating Case Temperature (Unless Otherwise Noted) 95
7 C64x+ Peripheral Information and Electrical Specifications **97**
7.1 Parameter Information 97
7.2 Recommended Clock and Control Signal Transition Behavior 99
7.3 Power Supplies 99
7.4 Enhanced Direct Memory Access (EDMA3) Controller 101
7.5 Interrupts 116
7.6 Reset Controller 120
7.7 PLL1 and PLL1 Controller 128
7.8 PLL2 and PLL2 Controller 143
7.9 DDR2 Memory Controller 152
7.10 External Memory Interface A (EMIFA) 154
7.11 I2C Peripheral 165
7.12 Host-Port Interface (HPI) Peripheral 170
7.13 Multichannel Buffered Serial Port (McBSP) 181
7.14 Ethernet MAC (EMAC) 195
7.15 Timers 213
7.16 Peripheral Component Interconnect (PCI) 215
7.17 General-Purpose Input/Output (GPIO) 222
7.18 Emulation Features and Capability 224
8 Mechanical Data **226**
8.1 Thermal Data 226
8.2 Packaging Information 226

Copyright © 2006–2012, Texas Instruments Incorporated

Revision History

NOTE: Page numbers for previous revisions may differ from page numbers in the current version.

This data manual revision history highlights the technical changes made to the document in this revision.

Scope: Applicable updates to the C64x device family, specifically relating to the TMS320C6454 device, have been incorporated.

C6454 DSP Revision History

SEE	ADDITIONS/MODIFICATIONS/DELETIONS
Section 7.7.1.1	Internal Clocks and Maximum Operating Frequencies: Modified values for SYSCLK2 and SYSCLK3 in fifth paragraph

Copyright © 2006–2012, Texas Instruments Incorporated

2 Device Overview

2.1 Device Characteristics

Table 2-1, provides an overview of the C6454 DSP. The tables show significant features of the C6454 device, including the capacity of on-chip RAM, the peripherals, the CPU frequency, and the package type with pin count.

Table 2-1. Characteristics of the C6454 Processor

HARDWARE FEATURES		C6454
Peripherals Not all peripherals pins are available at the same time (For more detail, see Section 3, *Device Configuration*).	EMIFA (64-bit bus width) (clock source = AECLKIN or SYSCLK4)	1
	DDR2 Memory Controller (32-bit bus width) [1.8 V I/O] (clock source = CLKIN2)	1
	EDMA3 (64 independent channels) [CPU/3 clock rate]	1
	I2C	1
	HPI (32- or 16-bit user selectable)	1 (HPI16 or HPI32)
	PCI (32-bit), [66-MHz or 33-MHz]	1 (PCI66 or PCI33)
	McBSPs (internal CPU/6 or external clock source up to 100 Mbps)	2
	10/100/1000 Ethernet MAC (EMAC)	1
	Management Data Input/Output (MDIO)	1
	64-Bit Timers (Configurable) (internal clock source = CPU/6 clock frequency)	2 64-bit ***or*** 4 32-bit
	General-Purpose Input/Output Port (GPIO)	16
On-Chip Memory	Size (Bytes)	1144K
	Organization	32K-Byte (32KB) L1 Program Memory Controller [SRAM/Cache] 32KB Data Memory Controller [SRAM/Cache] 1024KB L2 Unified Memory/Cache 32KB L2 ROM
C64x+ Megamodule Revision ID	Megamodule Revision ID Register (address location: 0181 2000h)	See Section 5.6, *Megamodule Revision*
JTAG BSDL_ID	JTAGID register (address location: 0x02A80008)	See Section 3.6, *JTAG ID (JTAGID) Register Description*
Frequency	MHz	720, 850, and 1000 (1 GHz)
Cycle Time	ns	1.39 ns (C6454-720), 1.17 ns (C6454-850), 1 ns (C6454 A-1000, -1000) [1-GHz CPU](1)
Voltage	Core (V)	1.25 V (A-1000/-1000) 1.2 V (-850/-720)
	I/O (V)	1.5/1.8 [EMAC RGMII], and 1.8 and 3.3 V [I/O Supply Voltage]
PLL1 and PLL1 Controller Options	CLKIN1 frequency multiplier	Bypass (x1), x15, x20, x25, x30, x32
PLL2	CLKIN2 frequency multiplier [DDR2 Memory Controller and EMAC support only]	x20
BGA Package	24 x 24 mm	697-Pin Flip-Chip Plastic BGA (CTZ) 697-Pin Plastic BGA (GTZ) 697-Pin Flip-Chip Plastic BGA (ZTZ)
Process Technology	µm	0.09 µm
Product Status(2)	Product Preview (PP), Advance Information (AI), or Production Data (PD)	PD

(1) The extended temperature device's (A-1000) electrical characteristics and ac timings are the same as those for the corresponding commercial temperature devices (-1000).
(2) PRODUCTION DATA information is current as of publication date. Products conform to specifications per the terms of Texas Instruments standard warranty. Production processing does not necessarily include testing of all parameters.

Copyright © 2006–2012, Texas Instruments Incorporated

Table 2-1. Characteristics of the C6454 Processor (continued)

HARDWARE FEATURES		C6454
Device Part Numbers	(For more details on the C64x+™ DSP part numbering, see Figure 2-12)	TMS320C6454CTZ7/GTZ7/ZTZ7 TMS320C6454CTZ8/GTZ8/ZTZ8 TMS320C6454CTZ/GTZ/ZTZ

2.2 CPU (DSP Core) Description

The C64x+ Central Processing Unit (CPU) consists of eight functional units, two register files, and two data paths as shown in Figure 2-1. The two general-purpose register files (A and B) each contain 32 32-bit registers for a total of 64 registers. The general-purpose registers can be used for data or can be data address pointers. The data types supported include packed 8-bit data, packed 16-bit data, 32-bit data, 40-bit data, and 64-bit data. Values larger than 32 bits, such as 40-bit-long or 64-bit-long values are stored in register pairs, with the 32 LSBs of data placed in an even register and the remaining 8 or 32 MSBs in the next upper register (which is always an odd-numbered register).

The eight functional units (.M1, .L1, .D1, .S1, .M2, .L2, .D2, and .S2) are each capable of executing one instruction every clock cycle. The .M functional units perform all multiply operations. The .S and .L units perform a general set of arithmetic, logical, and branch functions. The .D units primarily load data from memory to the register file and store results from the register file into memory.

The C64x+ CPU extends the performance of the C64x core through enhancements and new features.

Each C64x+ .M unit can perform one of the following each clock cycle: one 32 x 32 bit multiply, two 16 x 16 bit multiplies, two 16 x 32 bit multiplies, four 8 x 8 bit multiplies, four 8 x 8 bit multiplies with add operations, and four 16 x 16 multiplies with add/subtract capabilities (including a complex multiply). There is also support for Galois field multiplication for 8-bit and 32-bit data. Many communications algorithms such as FFTs and modems require complex multiplication. The complex multiply (CMPY) instruction takes for 16-bit inputs and produces a 32-bit real and a 32-bit imaginary output. There are also complex multiplies with rounding capability that produces one 32-bit packed output that contain 16-bit real and 16-bit imaginary values. The 32 x 32 bit multiply instructions provide the extended precision necessary for audio and other high-precision algorithms on a variety of signed and unsigned 32-bit data types.

The .L or (Arithmetic Logic Unit) now incorporates the ability to do parallel add/subtract operations on a pair of common inputs. Versions of this instruction exist to work on 32-bit data or on pairs of 16-bit data performing dual 16-bit add and subtracts in parallel. There are also saturated forms of these instructions.

The C64x+ core enhances the .S unit in several ways. In the C64x core, dual 16-bit MIN2 and MAX2 comparisons were only available on the .L units. On the C64x+ core they are also available on the .S unit which increases the performance of algorithms that do searching and sorting. Finally, to increase data packing and unpacking throughput, the .S unit allows sustained high performance for the quad 8-bit/16-bit and dual 16-bit instructions. Unpack instructions prepare 8-bit data for parallel 16-bit operations. Pack instructions return parallel results to output precision including saturation support.

 Copyright © 2006–2012, Texas Instruments Incorporated

Other new features include:

- **SPLOOP** - A small instruction buffer in the CPU that aids in creation of software pipelining loops where multiple iterations of a loop are executed in parallel. The SPLOOP buffer reduces the code size associated with software pipelining. Furthermore, loops in the SPLOOP buffer are fully interruptible.
- **Compact Instructions** - The native instruction size for the C6000 devices is 32 bits. Many common instructions such as MPY, AND, OR, ADD, and SUB can be expressed as 16 bits if the C64x+ compiler can restrict the code to use certain registers in the register file. This compression is performed by the code generation tools.
- **Instruction Set Enhancements** - As noted above, there are new instructions such as 32-bit multiplications, complex multiplications, packing, sorting, bit manipulation, and 32-bit Galois field multiplication.
- **Exception Handling** - Intended to aid the programmer in isolating bugs. The C64x+ CPU is able to detect and respond to exceptions, both from internally detected sources (such as illegal op-codes) and from system events (such as a watchdog time expiration).
- **Privilege** - Defines user and supervisor modes of operation, allowing the operating system to give a basic level of protection to sensitive resources. Local memory is divided into multiple pages, each with read, write, and execute permissions.
- **Time-Stamp Counter** - Primarily targeted for Real-Time Operating System (RTOS) robustness, a free-running time-stamp counter is implemented in the CPU which is ***not*** sensitive to system stalls.

For more details on the C64x+ CPU and its enhancements over the C64x architecture, see the following documents:

- *TMS320C64x/C64x+ DSP CPU and Instruction Set Reference Guide* (literature number SPRU732)
- *TMS320C64x+ DSP Cache User's Guide* (literature number SPRU862)
- *TMS320C64x+ Megamodule Reference Guide* (literature number SPRU871)
- *TMS320C6455 Technical Reference* (literature number SPRU965)
- *TMS320C64x to TMS320C64x+ CPU Migration Guide* (literature number SPRAA84)

Copyright © 2006–2012, Texas Instruments Incorporated

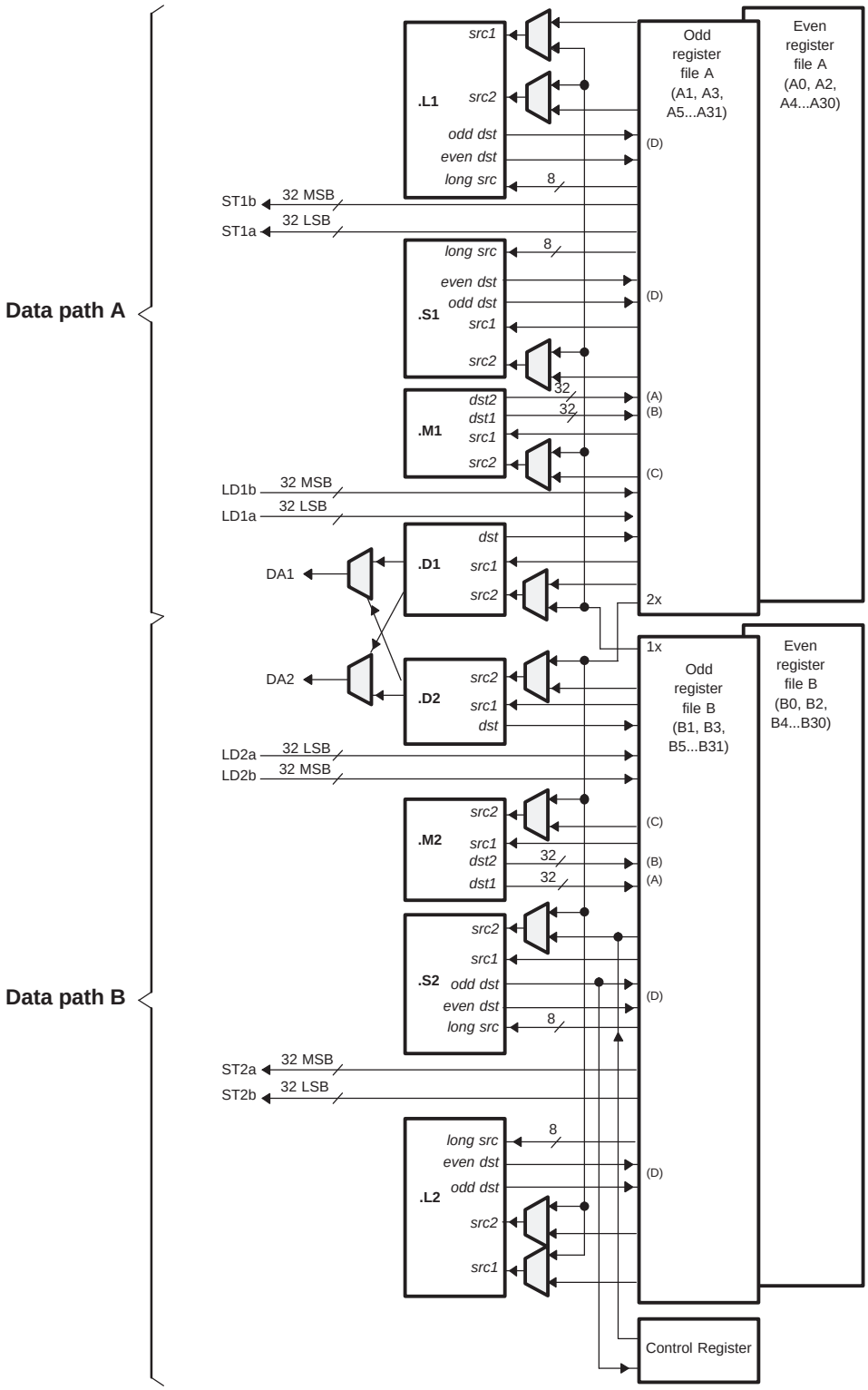

A. On .M unit, *dst2* is 32 MSB.
B. On .M unit, *dst1* is 32 LSB.
C. On C64x CPU .M unit, *src2* is 32 bits; on C64x+ CPU .M unit, *src2* is 64 bits.
D. On .L and .S units, *odd dst* connects to odd register files and *even dst* connects to even register files.

Figure 2-1. TMS320C64x+™ CPU (DSP Core) Data Paths

Copyright © 2006–2012, Texas Instruments Incorporated

2.3 Memory Map Summary

Table 2-2 shows the memory map address ranges of the C6454 device. The external memory configuration register address ranges in the C6454 device begin at the hex address location 0x7000 0000 for EMIFA and hex address location 0x7800 0000 for DDR2 Memory Controller.

Table 2-2. C6454 Memory Map Summary

MEMORY BLOCK DESCRIPTION	BLOCK SIZE (BYTES)	HEX ADDRESS RANGE
Reserved	1024K	0000 0000 - 000F FFFF
Internal ROM	32K	0010 0000 - 0010 7FFF
Reserved	7M - 32K	0010 8000 - 007F FFFF
Internal RAM (L2) [L2 SRAM]	1M	0080 0000 - 008F FFFF
Reserved	5M	0090 0000 - 00DF FFFF
L1P SRAM	32K	00E0 0000 - 00E0 7FFF
Reserved	1M - 32K	00E0 8000 - 00EF FFFF
L1D SRAM	32K	00F0 0000 - 00F0 7FFF
Reserved	1M - 32K	00F0 8000 - 00FF FFFF
Reserved	8M	0100 0000 - 017F FFFF
C64x+ Megamodule Registers	4M	0180 0000 - 01BF FFFF
Reserved	12.5M	01C0 0000 - 0287 FFFF
HPI Control Registers	256K	0288 0000 - 028B FFFF
McBSP 0 Registers	256K	028C 0000 - 028F FFFF
McBSP 1 Registers	256K	0290 0000 - 0293 FFFF
Timer 0 Registers	256K	0294 0000 - 0297 FFFF
Timer 1 Registers	128K	0298 0000 - 0299 FFFF
PLL1 Controller (including Reset Controller) Registers	512	029A 0000 - 029A 01FF
Reserved	256K - 512	029A 0200 - 029B FFFF
PLL2 Controller Registers	512	029C 0000 - 029C 01FF
Reserved	64K	029C 0200 - 029C FFFF
EDMA3 Channel Controller Registers	32K	02A0 0000 - 02A0 7FFF
Reserved	96K	02A0 8000 - 02A1 FFFF
EDMA3 Transfer Controller 0 Registers	32K	02A2 0000 - 02A2 7FFF
EDMA3 Transfer Controller 1 Registers	32K	02A2 8000 - 02A2 FFFF
EDMA3 Transfer Controller 2 Registers	32K	02A3 0000 - 02A3 7FFF
EDMA3 Transfer Controller 3 Registers	32K	02A3 8000 - 02A3 FFFF
Reserved	256K	02A4 0000 - 02A7 FFFF
Chip-Level Registers	256K	02A8 0000 - 02AB FFFF
Device State Control Registers	256K	02AC 0000 - 02AF FFFF
GPIO Registers	16K	02B0 0000 - 02B0 3FFF
I2C Data and Control Registers	256K	02B0 4000 - 02B3 FFFF
Reserved	720K	02B4 0000 - 02BF FFFF
PCI Control Registers	256K	02C0 0000 - 02C3 FFFF
Reserved	256K	02C4 0000 - 02C7 FFFF
EMAC Control	4K	02C8 0000 - 02C8 0FFF
EMAC Control Module Registers	2K	02C8 1000 - 02C8 17FF
MDIO Control Registers	2K	02C8 1800 - 02C8 1FFF
EMAC Descriptor Memory	8K	02C8 2000 - 02C8 3FFF
Reserved	496K	02C8 4000 - 02CF FFFF
Reserved	220M	02D0 0000 - 0FFF FFFF
Reserved	256M	1000 0000 - 1FFF FFFF

Copyright © 2006–2012, Texas Instruments Incorporated

Table 2-2. C6454 Memory Map Summary (continued)

MEMORY BLOCK DESCRIPTION	BLOCK SIZE (BYTES)	HEX ADDRESS RANGE
Reserved	256M	2000 0000 - 2FFF FFFF
McBSP 0 Data	256	3000 0000 - 3000 00FF
Reserved	64M - 256	3000 0100 - 33FF FFFF
McBSP 1 Data	256	3400 0000 - 3400 00FF
Reserved	64M - 256	3400 0100 - 37FF FFFF
Reserved	64M	3800 0000 - 3BFF FFFF
Reserved	2K	3C00 0000 - 3C00 07FF
Reserved	16M - 2K	3C00 0800 - 3CFF FFFF
Reserved	48M	3D00 0000 - 3FFF FFFF
PCI External Memory Space	256M	4000 0000 - 4FFF FFFF
Reserved	256M	5000 0000 - 5FFF FFFF
Reserved	256M	6000 0000 - 6FFF FFFF
EMIFA (EMIF64) Configuration Registers	128M	7000 0000 - 77FF FFFF
DDR2 Memory Controller Configuration Registers	128M	7800 0000 - 7FFF FFFF
Reserved	256M	8000 0000 - 8FFF FFFF
Reserved	256M	9000 0000 - 9FFF FFFF
EMIFA CE2 - SBSRAM/Async (1)	8M	A000 0000 - A07F FFFF
Reserved	256M - 8M	A080 0000 - AFFF FFFF
EMIFA CE3 - SBSRAM/Async (1)	8M	B000 0000 - B07F FFFF
Reserved	256M - 8M	B080 0000 - BFFF FFFF
EMIFA CE4 - SBSRAM/Async (1)	8M	C000 0000 - C07F FFFF
Reserved	256M - 8M	C080 0000 - CFFF FFFF
EMIFA CE5 - SBSRAM/Async (1)	8M	D000 0000 - D07F FFFF
Reserved	256M - 8M	D080 0000 - DFFF FFFF
DDR2 Memory Controller CE0 - DDR2 SDRAM	512M	E000 0000 - FFFF FFFF

(1) The EMIFA $\overline{CE0}$ and $\overline{CE1}$ are ***not*** functionally supported on the C6454 device and, therefore, are ***not*** pinned out.

Copyright © 2006–2012, Texas Instruments Incorporated

2.4 Boot Sequence

The boot sequence is a process by which the DSP's internal memory is loaded with program and data sections and the DSP's internal registers are programmed with predetermined values. The boot sequence is started automatically after each power-on reset, warm reset, and system reset. For more details on the initiators of these resets, see Section 7.6, *Reset Controller*.

There are several methods by which the memory and register initialization can take place. Each of these methods is referred to as a boot mode. The boot mode to be used is selected at reset through the BOOTMODE[3:0] pins.

Each boot mode can be classified as a hardware boot mode or as a software boot mode. Software boot modes require the use of the on-chip bootloader. The bootloader is DSP code that transfers application code from an external source into internal or external program memory after the DSP is taken out of reset. The bootloader is permanently stored in the internal ROM of the DSP starting at byte address 0010 0000h. Hardware boot modes are carried out by the boot configuration logic. The boot configuration logic is actual hardware that does not require the execution of DSP code. Section 2.4.1, *Boot Modes Supported*, describes each boot mode in more detail.

When accessing the internal ROM of the DSP, the CPU frequency must always be less than 750 MHz. Therefore, when using a software boot mode, care must be taken such that the CPU frequency does not exceed 750 MHz at any point during the boot sequence. After the boot sequence has completed, the CPU frequency can be programmed to the frequency required by the application.

2.4.1 Boot Modes Supported

The C6454 device has five boot modes:

- No boot (BOOTMODE[3:0] = 0000b)

  With no boot, the CPU executes directly from the internal L2 SRAM located at address 0x80 0000. Note: device operations is undefined if invalid code is located at address 0x80 0000. This boot mode is a hardware boot mode.

- Host boot (BOOTMODE[3:0] = 0001b and BOOTMODE[3:0] = 0111b)

  If host boot is selected, after reset, the CPU is internally "stalled" while the remainder of the device is released. During this period, an external host can initialize the CPU's memory space as necessary through Host Port Interface (HPI) or the Peripheral Component Interconnect (PCI) interface. Internal configuration registers, such as those that control the EMIF can also be initialized by the host with two exceptions: Device State Control registers (Section 3.4), PLL1 and PLL2 Controller registers (Section 7.7 and Section 7.8) cannot be accessed through any host interface, including HPI and PCI.

  Once the host is finished with all necessary initialization, it must generate a DSP interrupt (DSPINT) to complete the boot process. This transition causes boot configuration logic to bring the CPU out of the "stalled" state. The CPU then begins execution from the internal L2 SRAM located at 0x80 0000. Note that the DSP interrupt is registered in bit 0 (channel 0) of the EDMA Event Register (ER). This event must be cleared by software before triggering transfers on DMA channel 0.

  All memory, with the exceptions previously described, may be written to and read by the host. This allows for the host to verify what it sends to the DSP if required. After the CPU is out of the "stalled" state, the CPU needs to clear the DSPINT, otherwise, no more DSPINTs can be received.

  As previously mentioned, for the C6454 device, the Host Port Interface (HPI) and the Peripheral Component Interconnect (PCI) interface can be used for host boot. To use the HPI for host boot, the PCI_EN pin (Y29) must be low [default] (enabling the HPI peripheral) and BOOTMODE[3:0] must be set to 0001b at device reset. Conversely, to use the PCI interface for host boot, the PCI_EN pin (Y29) must be high (enabling the PCI peripheral) and BOOTMODE[3:0] must be set to 0111b at device reset. For the HPI host boot, the DSP interrupt can be generated through the use of the DSPINT bit in the HPI Control (HPIC) register.

  For the HPI host boot, the CPU is actually held in reset until a DSP interrupt is generated by the host. The DSP interrupt can be generated through the use of the DSPINT bit in the HPI Control (HPIC) register. Since the CPU is held in reset during HPI host boot, it will not respond to emulation software

Copyright © 2006–2012, Texas Instruments Incorporated

such as Code Composer Studio.

For the PCI host boot, the CPU is out of reset, but it executes an IDLE instruction until a DSP interrupt is generated by the host. The host can generate a DSP interrupt through the PCI peripheral by setting the DSPINT bit in the Back-End Application Interrupt Enable Set Register (PCIBINTSET) and the Status Set Register (PCISTATSET).

Note that the HPI host boot is a hardware boot mode while the PCI host boot is a software boot mode.

If PCI boot is selected, the on-chip bootloader configures the PLL1 Controller such that CLKIN1 is multiplied by 15. More specifically, PLLM is set to 0Eh (x15) and RATIO is set to 0 (÷1) in the PLL1 Multiplier Control Register (PLLM) and PLL1 Pre-Divider Register (PREDIV), respectively. The CLKIN1 frequency must not be greater than 50 MHz so that the maximum speed of the internal ROM, 750 MHz, is not violated. The CFGGP[2:0] pins must be set to 000b during reset for proper operation of the PCI boot mode.

As mentioned previously, a DSP interrupt must be generated at the end of the host boot process to begin execution of the loaded application. Since the DSP interrupt generated by the HPI and PCI is mapped to the EDMA event DSP_EVT (DMA channel 0), it will get recorded in bit 0 of the EDMA Event Register (ER). This event must be cleared by software before triggering transfers on DMA channel 0.

- EMIFA 8-bit ROM boot (BOOTMODE[3:0] = 0100b)

  After reset, the device will begin executing software out of an Asynchronous 8-bit ROM located in EMIFA CE3 space using the default settings in the EMIFA registers. This boot mode is a hardware boot mode.

- Master I2C boot (BOOTMODE[3:0] = 0101b)

  After reset, the DSP can act as a master to the I2C bus and copy data from an I2C EEPROM or a device acting as an I2C slave to the DSP using a predefined boot table format. The destination address and length are contained within the boot table. This boot mode is a software boot mode.

- Slave I2C boot (BOOTMODE[3:0] = 0110b)

  A Slave I2C boot is also implemented, which programs the DSP as an I2C Slave and simply waits for a Master to send data using a standard boot table format.

  Using the Slave I2C boot, a single DSP or a device acting as an I2C Master can simultaneously boot multiple slave DSPs connected to the same I2C bus. Note that the Master DSP may require booting via an I2C EEPROM before acting as a Master and booting other DSPs.

  The Slave I2C boot is a software boot mode.

2.4.2 2nd-Level Bootloaders

Any of the boot modes can be used to download a 2nd-level bootloader. A 2nd-level bootloader allows for any level of customization to current boot methods as well as definition of a completely customized boot. TI offers a few 2nd-level bootloaders, such as an EMAC bootloader, which can be loaded using the Master I2C boot.

 Copyright © 2006–2012, Texas Instruments Incorporated

2.5 Pin Assignments

2.5.1 Pin Map

Figure 2-2 through Figure 2-5 show the C6454 device pin assigments in four quadrants (A, B, C, and D).

	1	2	3	4	5	6	7	8	9	10	11	12	13	14	15	
AJ	DV_{DD33}	GP[5]	FSX0	CLKS	DR0	TINPL1	DV_{DD33}	V_{SS}	TCK	TMS	RSV26	RSV40	SYSCLK4/ GP[1]	V_{SS}	DV_{DD33}	AJ
AH	V_{SS}	GP[4]	FSR0	NMI	DR1/ GP[8]	TINPL0	$\overline{TRST}$	TDO	TDI	EMU17	RSV27	EMU16	EMU9	DV_{DD33}	V_{SS}	AH
AG	CLKR0	GP[7]	GP[6]	FSX1/ GP[11]	DX1/ GP[9]	CLKX0	TOUTL1	EMU6	EMU2	RSV38	RSV39	DV_{DD33}	V_{SS}	$\overline{RESET}$	RSV46	AG
AF	DV_{DD33}	V_{SS}	HD11/ AD11	CLKR1/ GP[0]	CLKX1/ GP[3]	DX0	EMU0	TOUTL0	EMU4	EMU3	EMU8	EMU7	EMU14	$\overline{POR}$	RSV45	AF
AE	HD22/ AD22	HD0/ AD0	HD10/ AD10	V_{SS}	FSR1/ GP[10]	DV_{DD33}	V_{SS}	DV_{DD33}	EMU15	EMU12	EMU1	EMU5	EMU18	$\overline{RESETSTAT}$	DV_{DD33}	AE
AD	HD21/ AD21	HD25/ AD25	HD5/ AD5	HD3/ AD3	DV_{DD33}	V_{SS}	DV_{DD33}	EMU13	RSV37	EMU10	RSV36	EMU11	V_{SS}	DV_{DD33}	V_{SS}	AD
AC	HD19/ AD19	HD13/ AD13	HD23/ AD23	HD29/ AD29	HD27/ AD27	DV_{DD33}	V_{SS}	V_{SS}	DV_{DD33}	V_{SS}	DV_{DD33}	V_{SS}	DV_{DD33}	V_{SS}	RSV64	AC
AB	HD17/ AD17	HD15/ AD15	HD9/ AD9	HD7/ AD7	HD1/ AD1	V_{SS}	DV_{DD33}									AB
AA	DV_{DD33}	V_{SS}	HD31/ AD31	HD28/ AD28	HD30/ AD30	DV_{DD33}	V_{SS}									AA
Y	HD26/ AD26	HD18/ AD18	HD16/ AD16	HD6/ AD6	HD4/ AD4	V_{SS}	DV_{DD33}									Y
W	HD24/ AD24	HD20/ AD20	RSV03	HD14/ AD14	HD8/ AD8	HD2/ AD2	V_{SS}				V_{SS}	CV_{DD}	V_{SS}	CV_{DD}	V_{SS}	W
V	DV_{DD33}	V_{SS}	HHWIL/ PCLK	HD12/ AD12	RSV02	V_{SS}	DV_{DD33}				CV_{DD}	V_{SS}	CV_{DD}	V_{SS}	RSV68	V
U	$\overline{HDS2}$/ $\overline{PCBE1}$	$\overline{HDS1}$/ $\overline{PSERR}$	$\overline{HINT}$/ $\overline{PFRAME}$	HCNTL1/ $\overline{PDEVSEL}$	HCNTL0/ $\overline{PSTOP}$	$\overline{HCS}$/ $\overline{PPERR}$	V_{SS}				V_{SS}	CV_{DD}	V_{SS}	CV_{DD}	V_{SS}	U
T	RSV15	RSV16	$\overline{HAS}$/ PPAR	$\overline{HRDY}$/ $\overline{PIRDY}$	HR/$\overline{W}$/ $\overline{PCBE2}$	V_{SS}	DV_{DD33}				CV_{DD}	V_{SS}	CV_{DD}	V_{SS}	CV_{DD}	T
R	DV_{DD33}	V_{SS}	PIDSEL	$\overline{PGNT}$/ GP[12]	$\overline{PRST}$/ GP[13]	DV_{DD33}	V_{SS}				V_{SS}	CV_{DD}	V_{SS}	CV_{DD}	V_{SS}	R
	1	2	3	4	5	6	7	8	9	10	11	12	13	14	15	

Figure 2-2. C6454 Pin Map (Bottom View) [Quadrant A]

	16	17	18	19	20	21	22	23	24	25	26	27	28	29	
AJ	V_{SS}	RSV77	RSV56	RSV60	V_{SS}	RSV61	RSV57	RSV78	V_{SS}	DV_{DD33}	AED5	AED6	AED20	DV_{DD33}	AJ
AH	DV_{DD33}	RSV59	RSV55	V_{SS}	RSV76	Vss	RSV58	RSV62	DV_{DD33}	V_{SS}	AED14	AED2	AED18	V_{SS}	AH
AG	V_{SS}	DV_{DD33}	RSV48	RSV52	V_{SS}	RSV53	RSV49	DV_{DD33}	V_{SS}	AED3	SCL	AED9	AED16	AED30	AG
AF	DV_{DD33}	RSV47	RSV51	V_{SS}	RSV75	V_{SS}	RSV54	RSV50	DV_{DD33}	AED1	SDA	AED10	AED15	AED19	AF
AE	V_{SS}	RSV72	V_{SS}	RSV73	V_{SS}	RSV17	V_{SS}	RSV74	V_{SS}	AED7	AED12	AED4	AED13	AED17	AE
AD	RSV66	V_{SS}	DV_{DD33}	V_{SS}	RSV63	V_{SS}	DV_{DD33}	V_{SS}	DV_{DD33}	AED0	AED11	AED8	AED22	AED21	AD
AC	V_{SS}	RSV65	V_{SS}	DV_{DD33}	V_{SS}	DV_{DD33}	V_{SS}	DV_{DD33}	V_{SS}	AED24	AED26	AED28	V_{SS}	DV_{DD33}	AC
AB								V_{SS}	DV_{DD33}	$\overline{AAWE}$/ $\overline{ASWE}$	AED23	AED25	AED27	AED29	AB
AA								DV_{DD33}	V_{SS}	$\overline{ABE1}$	$\overline{ABE0}$	AED31	$\overline{ABE2}$	$\overline{ABE3}$	AA
Y								V_{SS}	DV_{DD33}	RSV43	RSV42	RSV44	$\overline{AAOE}$/ $\overline{ASOE}$	PCI_EN	Y
W	RSV70	V_{SS}	RSV71	V_{SS}				DV_{DD33}	V_{SS}	AR/$\overline{W}$	$\overline{ACE3}$	$\overline{ACE2}$	RSV41	$\overline{ABE7}$	W
V	V_{SS}	RSV69	V_{SS}	CV_{DD}				V_{SS}	DV_{DD33}	ABA1/ EMIFA_EN	ABA0/ DDR2_EN	$\overline{ACE5}$	$\overline{ACE4}$	AECLKOUT	V
U	RSV67	V_{SS}	CV_{DD}	V_{SS}				DV_{DD33}	V_{SS}	AEA0/ CFGGP0	AEA1/ CFGGP1	AEA6/ PCI66	AEA5/ MCBSP1 _EN	RSV20	U
T	V_{SS}	CV_{DD}	V_{SS}	CV_{DD}				V_{SS}	DV_{DD33}	AEA11	AEA2/ CFGGP2	AEA3	AEA4/ SYSCLKOUT _EN	PLLV1	T
R	CV_{DD}	V_{SS}	CV_{DD}	V_{SS}				DV_{DD33}	V_{SS}	AEA14/ HPI_ WIDTH	$\overline{ASADS}$/ $\overline{ASRE}$	AEA13/ LENDIAN	AEA12	$\overline{AHOLD}$	R
	16	17	18	19	20	21	22	23	24	25	26	27	28	29	

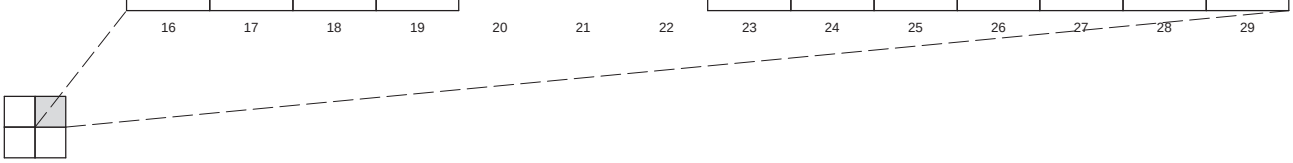

Figure 2-3. C6454 Pin Map (Bottom View) [Quadrant B]

Copyright © 2006–2012, Texas Instruments Incorporated

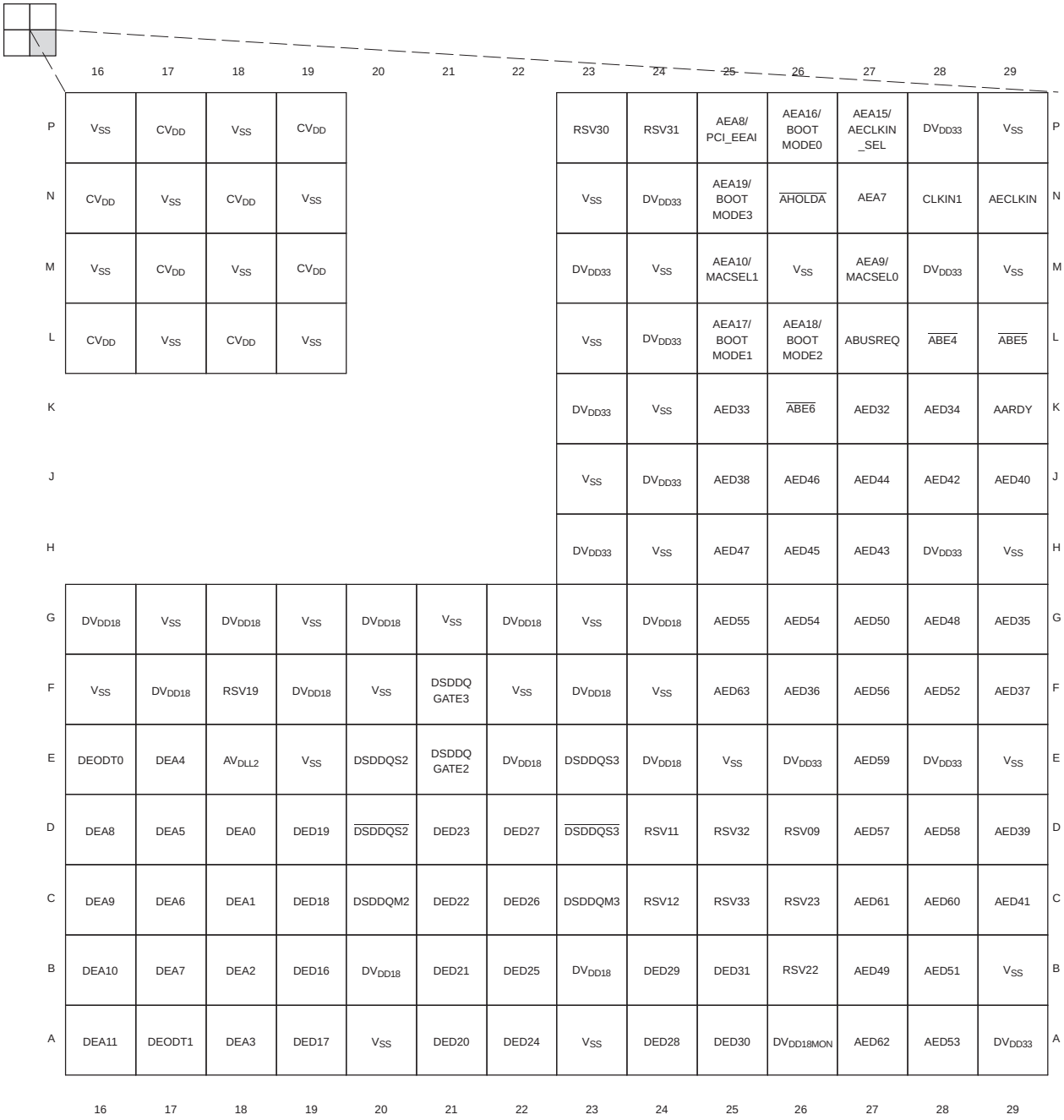

Figure 2-4. C6454 Pin Map (Bottom View) [Quadrant C]

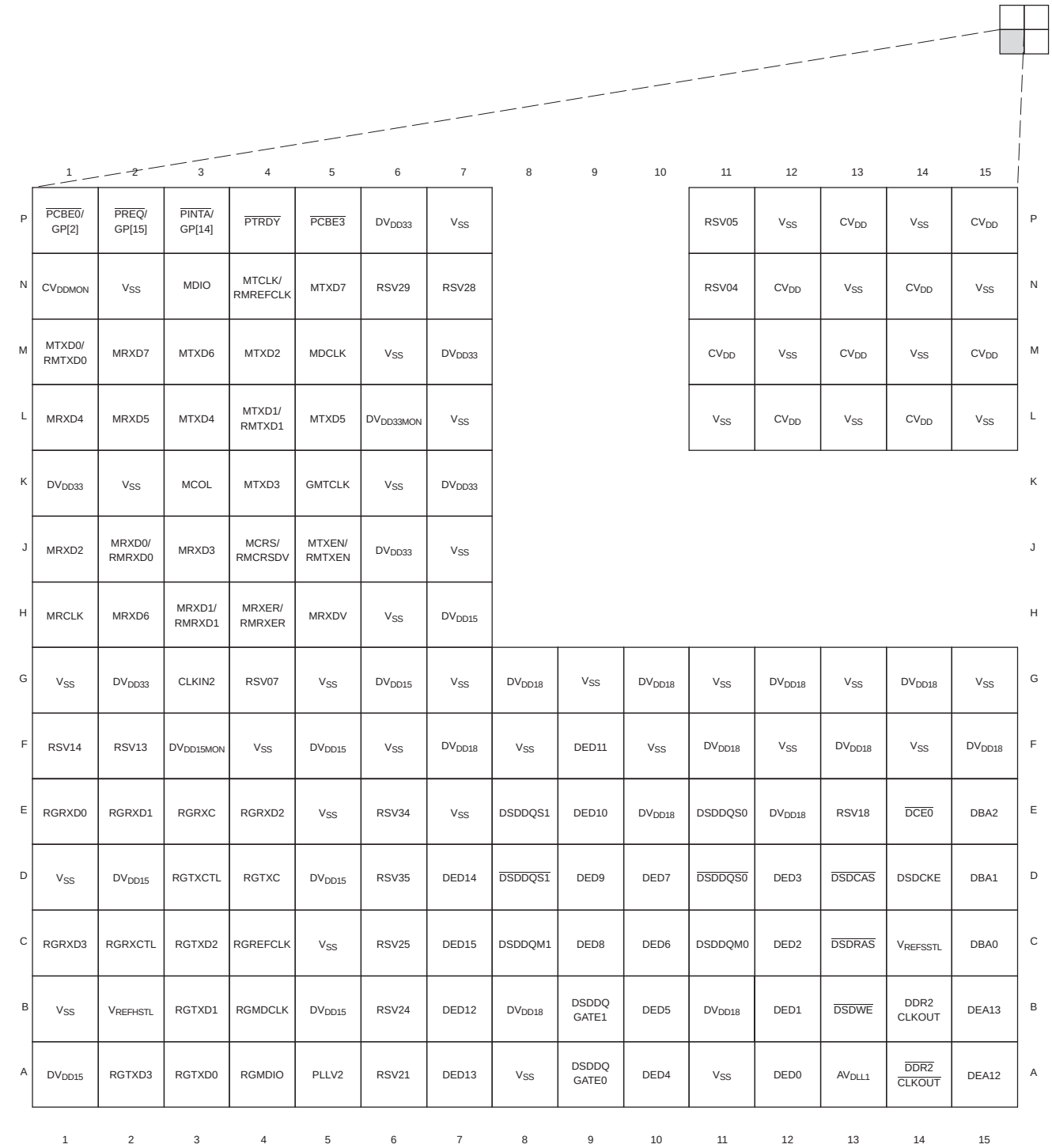

	1	2	3	4	5	6	7	8	9	10	11	12	13	14	15	
P	$\overline{PCBE0}$/ GP[2]	$\overline{PREQ}$/ GP[15]	$\overline{PINTA}$/ GP[14]	$\overline{PTRDY}$	$\overline{PCBE3}$	DV_{DD33}	V_{SS}				RSV05	V_{SS}	CV_{DD}	V_{SS}	CV_{DD}	P
N	CV_{DDMON}	V_{SS}	MDIO	MTCLK/ RMREFCLK	MTXD7	RSV29	RSV28				RSV04	CV_{DD}	V_{SS}	CV_{DD}	V_{SS}	N
M	MTXD0/ RMTXD0	MRXD7	MTXD6	MTXD2	MDCLK	V_{SS}	DV_{DD33}				CV_{DD}	V_{SS}	CV_{DD}	V_{SS}	CV_{DD}	M
L	MRXD4	MRXD5	MTXD4	MTXD1/ RMTXD1	MTXD5	$DV_{DD33MON}$	V_{SS}				V_{SS}	CV_{DD}	V_{SS}	CV_{DD}	V_{SS}	L
K	DV_{DD33}	V_{SS}	MCOL	MTXD3	GMTCLK	V_{SS}	DV_{DD33}									K
J	MRXD2	MRXD0/ RMRXD0	MRXD3	MCRS/ RMCRSDV	MTXEN/ RMTXEN	DV_{DD33}	V_{SS}									J
H	MRCLK	MRXD6	MRXD1/ RMRXD1	MRXER/ RMRXER	MRXDV	V_{SS}	DV_{DD15}									H
G	V_{SS}	DV_{DD33}	CLKIN2	RSV07	V_{SS}	DV_{DD15}	V_{SS}	DV_{DD18}	V_{SS}	DV_{DD18}	V_{SS}	DV_{DD18}	V_{SS}	DV_{DD18}	V_{SS}	G
F	RSV14	RSV13	$DV_{DD15MON}$	V_{SS}	DV_{DD15}	V_{SS}	DV_{DD18}	V_{SS}	DED11	V_{SS}	DV_{DD18}	V_{SS}	DV_{DD18}	V_{SS}	DV_{DD18}	F
E	RGRXD0	RGRXD1	RGRXC	RGRXD2	V_{SS}	RSV34	V_{SS}	DSDDQS1	DED10	DV_{DD18}	DSDDQS0	DV_{DD18}	RSV18	$\overline{DCE0}$	DBA2	E
D	V_{SS}	DV_{DD15}	RGTXCTL	RGTXC	DV_{DD15}	RSV35	DED14	$\overline{DSDDQS1}$	DED9	DED7	$\overline{DSDDQS0}$	DED3	$\overline{DSDCAS}$	DSDCKE	DBA1	D
C	RGRXD3	RGRXCTL	RGTXD2	RGREFCLK	V_{SS}	RSV25	DED15	DSDDQM1	DED8	DED6	DSDDQM0	DED2	$\overline{DSDRAS}$	$V_{REFSSTL}$	DBA0	C
B	V_{SS}	$V_{REFHSTL}$	RGTXD1	RGMDCLK	DV_{DD15}	RSV24	DED12	DV_{DD18}	DSDDQ GATE1	DED5	DV_{DD18}	DED1	$\overline{DSDWE}$	DDR2 CLKOUT	DEA13	B
A	DV_{DD15}	RGTXD3	RGTXD0	RGMDIO	PLLV2	RSV21	DED13	V_{SS}	DSDDQ GATE0	DED4	V_{SS}	DED0	AV_{DLL1}	$\overline{DDR2}$ $\overline{CLKOUT}$	DEA12	A
	1	2	3	4	5	6	7	8	9	10	11	12	13	14	15	

Figure 2-5. C6454 Pin Map (Bottom View) [Quadrant D]

Copyright © 2006–2012, Texas Instruments Incorporated

2.6 Signal Groups Description

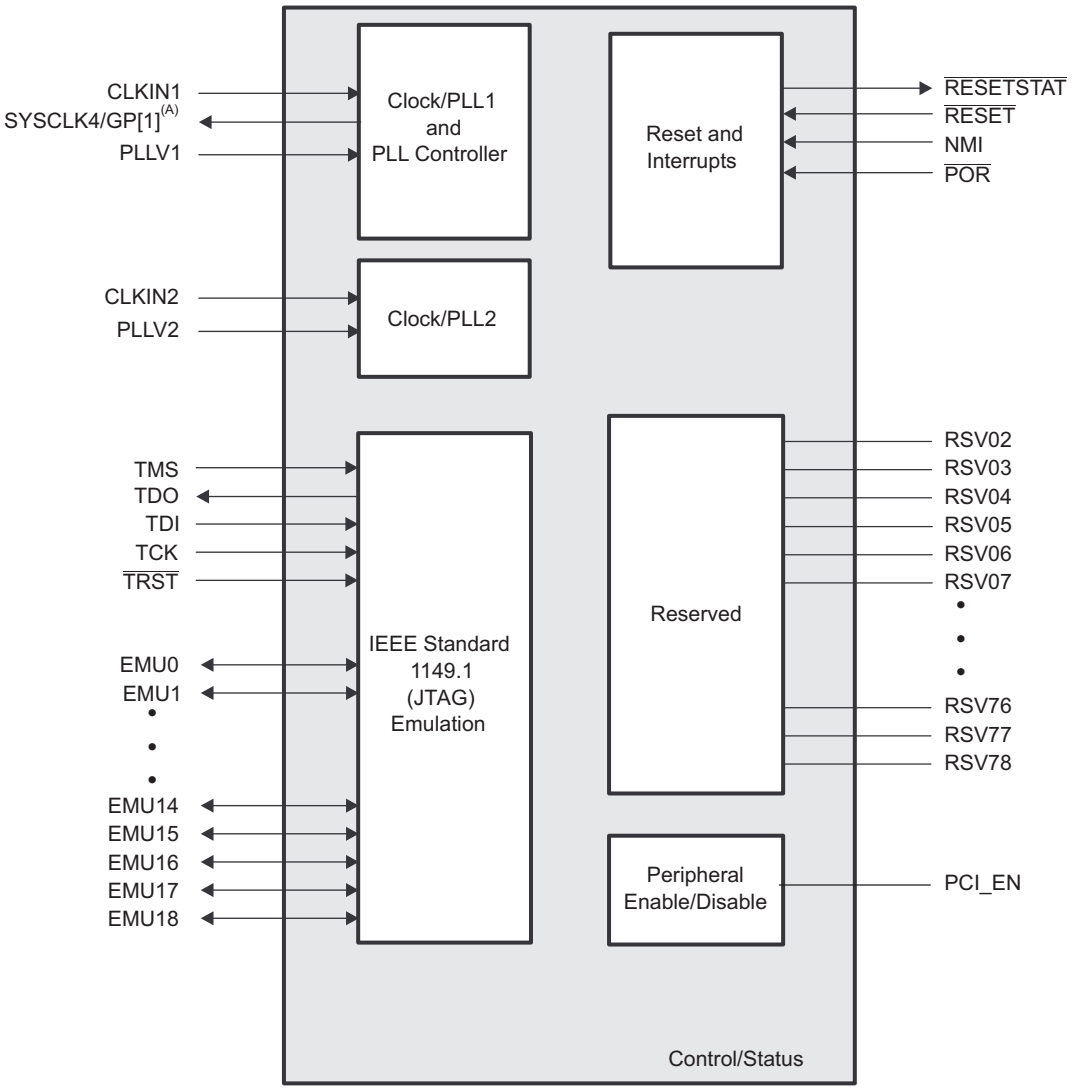

A. This pin functions as GP[1] by default. For more details, see Section 3.

Figure 2-6. CPU and Peripheral Signals

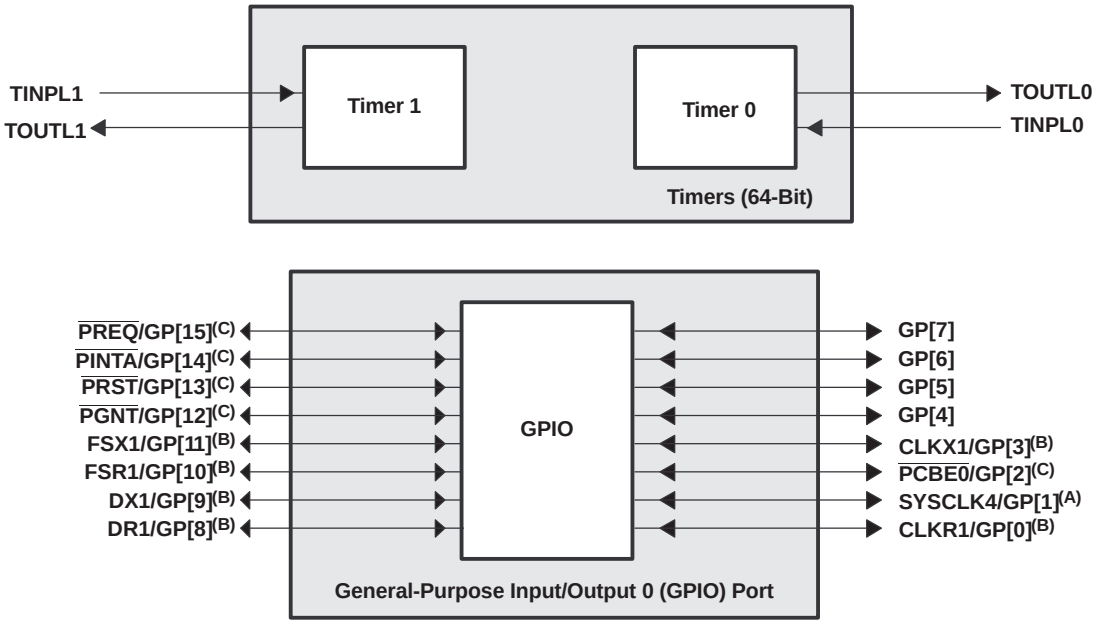

A. This pin functions as GP[1] by default. For more details, see the *Device Configuration* section of this document.
B. These McBSP1 peripheral pins are muxed with the GPIO peripheral pins and by default these signals function as GPIO peripheral pins. For more details, see the *Device Configuration* section of this document.
C. These PCI peripheral pins are muxed with the GPIO peripheral pins and by default these signals function as GPIO peripheral pins. For more details, see the *Device Configuration* section of this document.

Figure 2-7. Timers/GPIO Peripheral Signals

Copyright © 2006–2012, Texas Instruments Incorporated

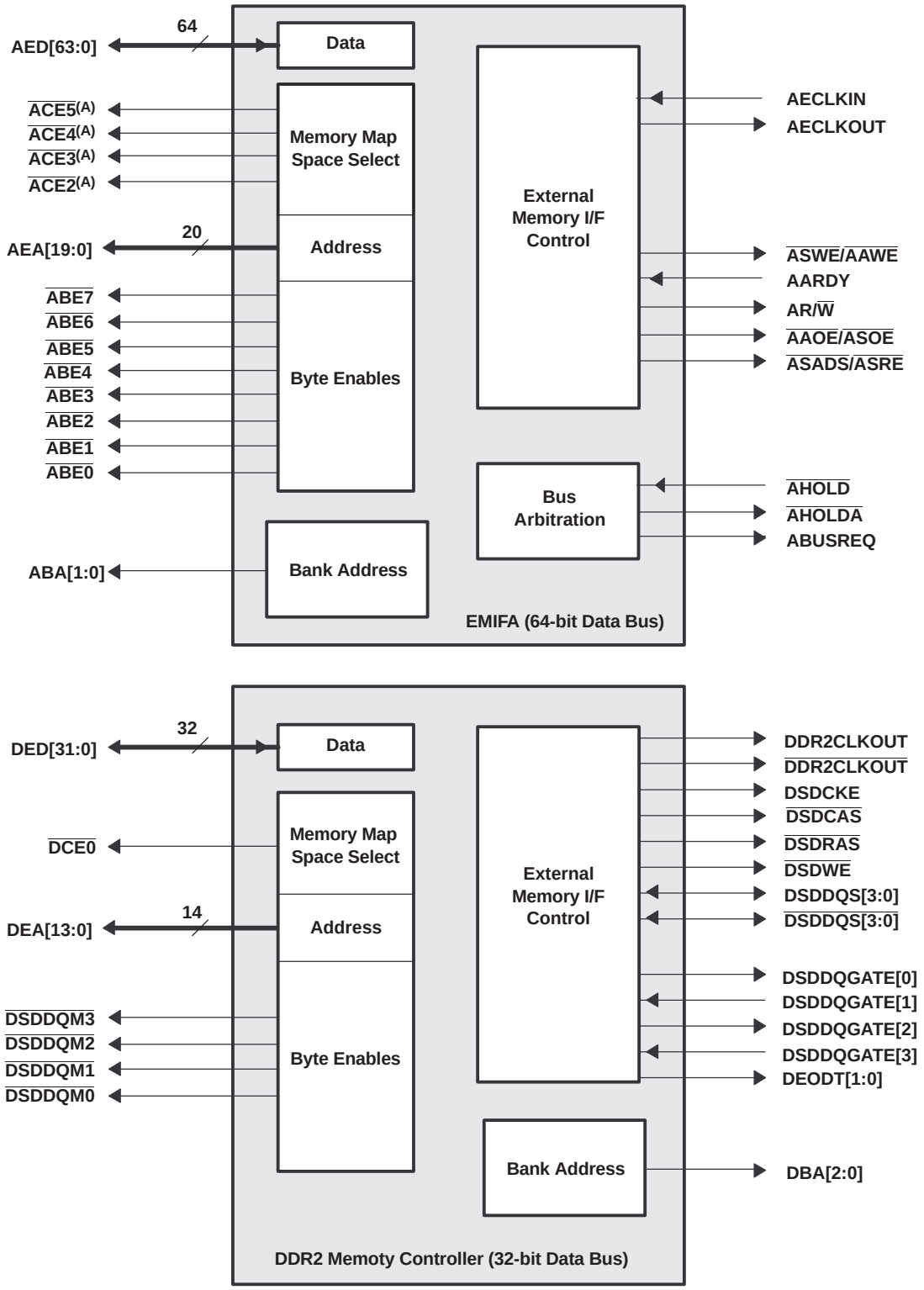

Figure 2-8. EMIFA and DDR2 Memory Controller Peripheral Signals

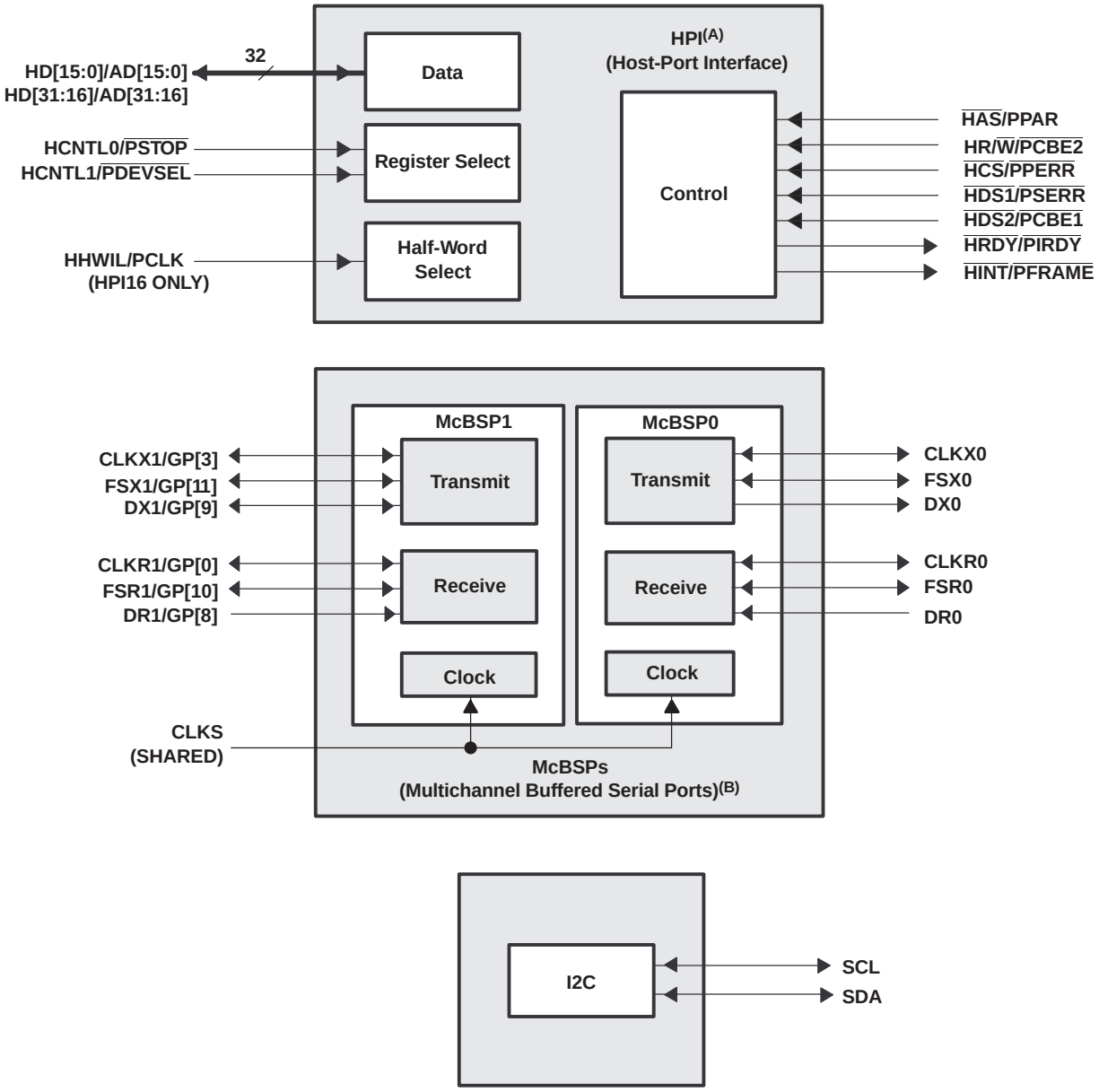

A. These HPI pins are muxed with the PCI peripheral. By default, these pins function as HPI. When the HPI is enabled, the number of HPI pins used depends on the HPI configuration (HPI16 or HPI32). For more details on these muxed pins, see the *Device Configuration* section of this document.

B. These McBSP1 peripheral pins are muxed with the GPIO peripheral pins and by default these signals function as GPIO peripheral pins. For more details, see the *Device Configuration* section of this document.

Figure 2-9. HPI/McBSP/I2C Peripheral Signals

Copyright © 2006–2012, Texas Instruments Incorporated

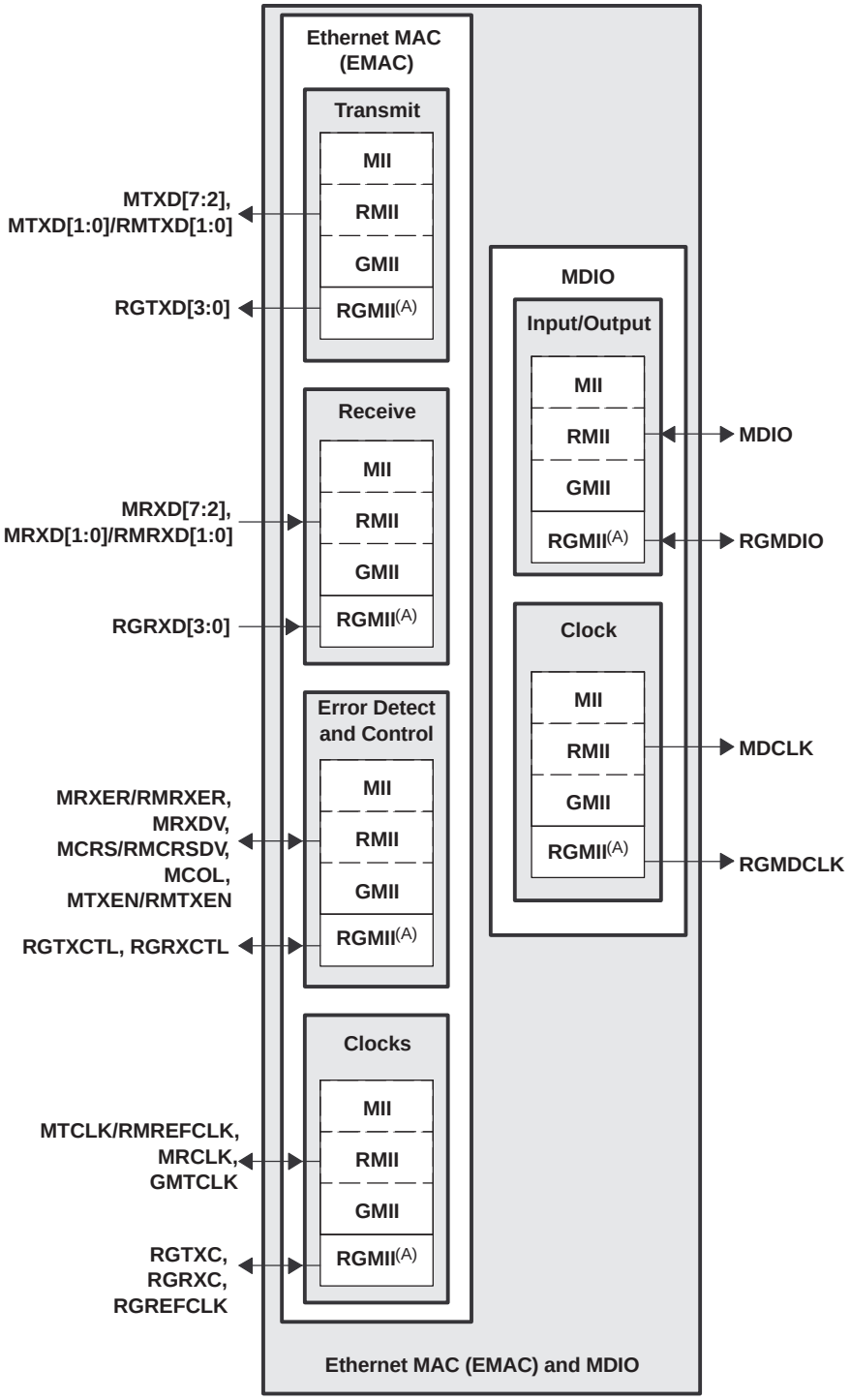

A. RGMII signals are mutually exclusive to all other EMAC signals.

Figure 2-10. EMAC/MDIO [MII, GMII, RMII, and RGMII] Peripheral Signals

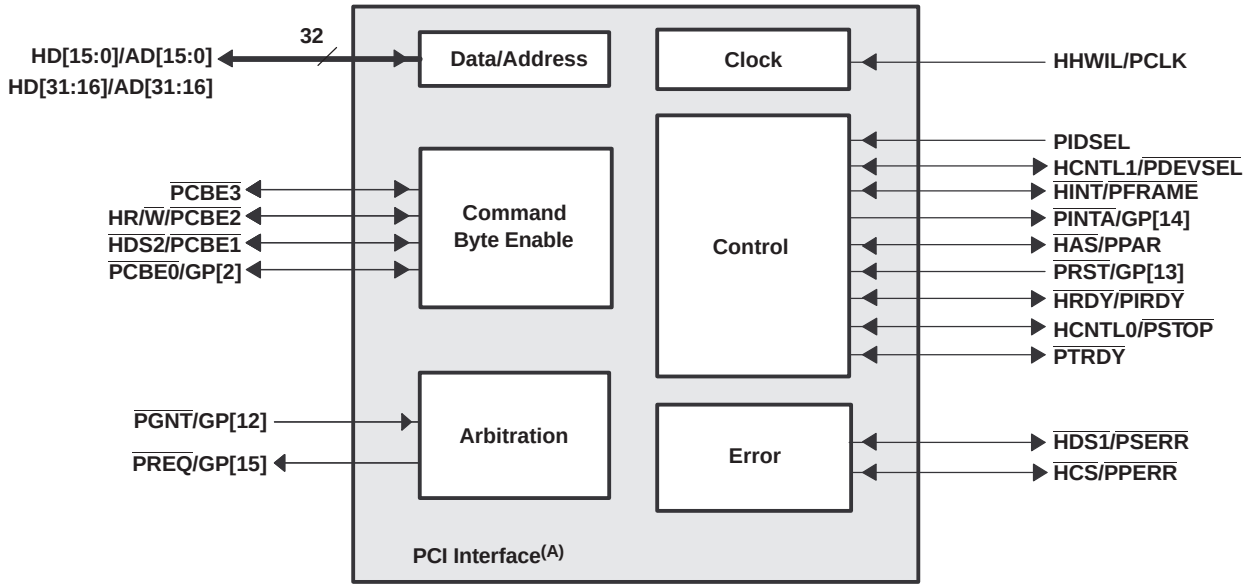

A. These PCI pins are muxed with the HPI or GPIO peripherals. By default, these signals function as HPI or GPIO or EMAC. For more details on these muxed pins, see the *Device Configuration* section of this document.

Figure 2-11. PCI Peripheral Signals

2.7 Terminal Functions

The terminal functions table (Table 2-3) identifies the external signal names, the associated pin (ball) numbers along with the mechanical package designator, the pin type (I, O/Z, or I/O/Z), whether the pin has any internal pullup/pulldown resistors, and a functional pin description. For more detailed information on device configuration, peripheral selection, multiplexed/shared pins, and pullup/pulldown resistors, see Section 3, *Device Configuration*.

Table 2-3. Terminal Functions

SIGNAL NAME	NO.	TYPE(1)	IPD/IPU(2)	DESCRIPTION
CLOCK/PLL CONFIGURATIONS				
CLKIN1	N28	I	IPD	Clock Input for PLL1.
CLKIN2	G3	I	IPD	Clock Input for PLL2.
PLLV1	T29	A		1.8-V I/O supply voltage for PLL1
PLLV2	A5	A		1.8-V I/O supply voltage for PLL2
SYSCLK4/GP[1](3)	AJ13	I/O/Z	IPD	SYSCLK4 is the clock output at 1/8 of the device speed (**O/Z**) or this pin can be programmed as the GP1 pin (**I/O/Z**) [default].
JTAG EMULATION				
TMS	AJ10	I	IPU	JTAG test-port mode select
TDO	AH8	O/Z	IPU	JTAG test-port data out
TDI	AH9	I	IPU	JTAG test-port data in
TCK	AJ9	I	IPU	JTAG test-port clock
$\overline{\text{TRST}}$	AH7	I	IPD	JTAG test-port reset. For IEEE 1149.1 JTAG compatibility, see Section 7.18.3.1.1.
EMU0(4)	AF7	I/O/Z	IPU	Emulation pin 0

(1) I = Input, O = Output, Z = High impedance, S = Supply voltage, GND = Ground, A = Analog signal
(2) IPD = Internal pulldown, IPU = Internal pullup. For most systems, a 1-kΩ resistor can be used to oppose the IPU/IPD. For more detailed information on pullup/pulldown resistors and situations where external pullup/pulldown resistors are required, see Section 3.7, *Pullup/Pulldown Resistors*.
(3) These pins are multiplexed pins. For more details, see Section 3, *Device Configuration*.
(4) The C6454 DSP does not require external pulldown resistors on the EMU0 and EMU1 pins for normal or boundary-scan operation.

Copyright © 2006–2012, Texas Instruments Incorporated

Table 2-3. Terminal Functions (continued)

SIGNAL NAME	NO.	TYPE(1)	IPD/IPU(2)	DESCRIPTION
EMU1(4)	AE11	I/O/Z	IPU	Emulation pin 1
EMU2	AG9	I/O/Z	IPU	Emulation pin 2
EMU3	AF10	I/O/Z	IPU	Emulation pin 3
EMU4	AF9	I/O/Z	IPU	Emulation pin 4
EMU5	AE12	I/O/Z	IPU	Emulation pin 5
EMU6	AG8	I/O/Z	IPU	Emulation pin 6
EMU7	AF12	I/O/Z	IPU	Emulation pin 7
EMU8	AF11	I/O/Z	IPU	Emulation pin 8
EMU9	AH13	I/O/Z	IPU	Emulation pin 9
EMU10	AD10	I/O/Z	IPU	Emulation pin 10
EMU11	AD12	I/O/Z	IPU	Emulation pin 11
EMU12	AE10	I/O/Z	IPU	Emulation pin 12
EMU13	AD8	I/O/Z	IPU	Emulation pin 13
EMU14	AF13	I/O/Z	IPU	Emulation pin 14
EMU15	AE9	I/O/Z	IPU	Emulation pin 15
EMU16	AH12	I/O/Z	IPU	Emulation pin 16
EMU17	AH10	I/O/Z	IPU	Emulation pin 17
EMU18	AE13	I/O/Z	IPU	Emulation pin 18
RESETS, INTERRUPTS, AND GENERAL-PURPOSE INPUT/OUTPUTS				
$\overline{\text{RESET}}$	AG14	I		Device reset
NMI	AH4	I	IPD	Nonmaskable interrupt, edge-driven (rising edge) Any noise on the NMI pin may trigger an NMI interrupt; therefore, if the NMI pin is not used, it is recommended that the NMI pin be grounded versus relying on the IPD.
$\overline{\text{RESETSTAT}}$	AE14	O		Reset Status pin. The $\overline{\text{RESETSTAT}}$ pin indicates when the device is in reset
$\overline{\text{POR}}$	AF14	I		Power on reset.
GP[7]	AG2	I/O/Z	IPD	General-purpose input/output (GPIO) pins (**I/O/Z**).
GP[6]	AG3	I/O/Z	IPD	
GP[5]	AJ2	I/O/Z	IPD	
GP[4]	AH2	I/O/Z	IPD	
$\overline{\text{PREQ}}$/ GP[15]	P2	I/O/Z		PCI peripheral pins or General-purpose input/output (GPIO) [15:12, 2] pins (**I/O/Z**) [default] PCI bus request (**O/Z**) or GP[15] (**I/O/Z**) [default] PCI interrupt A (**O/Z**) or GP[14] (**I/O/Z**) [default] PCI reset (**I**) or GP[13] (**I/O/Z**) [default] PCI bus grant (**I**) or GP[12] (**I/O/Z**) [default] PCI command/byte enable 0 (**I/O/Z**) or GP[2] (**I/O/Z**) [default] McBSP1 transmit clock (**I/O/Z**) or GP[3] (**I/O/Z**) [default] McBSP1 receive clock (**I/O/Z**) or GP[0] (**I/O/Z**) [default] GP[1] pin (**I/O/Z**). SYSCLK4 is the clock output at 1/8 of the device speed (**O/Z**) or this pin can be programmed as a GP[1] pin (**I/O/Z**) [default].
$\overline{\text{PINTA}}$ (5)/ GP[14]	P3	I/O/Z		
$\overline{\text{PRST}}$/ GP[13]	R5	I/O/Z		
$\overline{\text{PGNT}}$/ GP[12]	R4	I/O/Z		
FSX1/GP[11]	AG4	I/O/Z	IPD	
FSR1/GP[10]	AE5	I/O/Z	IPD	
DX1/GP[9]	AG5	I/O/Z	IPD	
DR1/GP[8]	AH5	I/O/Z	IPD	
CLKX1/GP[3]	AF5	I/O/Z	IPD	
$\overline{\text{PCBE0}}$/ GP[2]	P1	I/O/Z		
SYSCLK4/GP[1]	AJ13	O/Z	IPD	
CLKR1/GP[0]	AF4	I/O/Z	IPD	
HOST-PORT INTERFACE (HPI) or PERIPHERAL COMPONENT INTERCONNECT (PCI)				
PCI_EN	Y29	I	IPD	PCI enable pin. This pin controls the selection (enable/disable) of the HPI and GP[15:8], or PCI peripherals. This pin works in conjunction with the MCBSP**1**_EN (AEA5 pin) to enable/disable other peripherals (for more details, see Section 3, *Device Configuration*).

(5) These pins function as open-drain outputs when configured as PCI pins.

Copyright © 2006–2012, Texas Instruments Incorporated

Table 2-3. Terminal Functions (continued)

SIGNAL NAME	NO.	TYPE(1)	IPD/IPU(2)	DESCRIPTION
$\overline{\text{HINT}}$/$\overline{\text{PFRAME}}$	U3	I/O/Z		Host interrupt from DSP to host (**O/Z**) or PCI frame (**I/O/Z**)
HCNTL1/$\overline{\text{PDEVSEL}}$	U4	I/O/Z		Host control - selects between control, address, or data registers (**I**) [default] or PCI device select (**I/O/Z**)
HCNTL0/$\overline{\text{PSTOP}}$	U5	I/O/Z		Host control - selects between control, address, or data registers (**I**) [default] or PCI stop (**I/O/Z**)
HHWIL/PCLK	V3	I/O/Z		Host half-word select - first or second half-word (not necessarily high or low order) [For HPI16 bus width selection only] (**I**) [default] or PCI clock (**I**)
HR/$\overline{\text{W}}$/$\overline{\text{PCBE2}}$	T5	I/O/Z		Host read or write select (**I**) [default] or PCI command/byte enable 2 (**I/O/Z**)
$\overline{\text{HAS}}$/PPAR	T3	I/O/Z		Host address strobe (**I**) [default] or PCI parity (**I/O/Z**)
$\overline{\text{HCS}}$/$\overline{\text{PPERR}}$	U6	I/O/Z		Host chip select (**I**) [default] or PCI parity error (**I/O/Z**)
$\overline{\text{HDS1}}$/$\overline{\text{PSERR}}$ (5)	U2	I/O/Z		Host data strobe 1 (**I**) [default] or PCI system error (**I/O/Z**)
$\overline{\text{HDS2}}$/$\overline{\text{PCBE1}}$	U1	I/O/Z		Host data strobe 2 (**I**) [default] or PCI command/byte enable 1 (**I/O/Z**)
$\overline{\text{HRDY}}$/$\overline{\text{PIRDY}}$	T4	I/O/Z		Host ready from DSP to host (**O/Z**) [default] or PCI initiator ready (**I/O/Z**)
$\overline{\text{PREQ}}$/ GP[15]	P2	I/O/Z		PCI bus request (**O/Z**) or GP[15] (**I/O/Z**) [default]
$\overline{\text{PINTA}}$ (6)/ GP[14]	P3	I/O/Z		PCI interrupt A (**O/Z**) or GP[14] (**I/O/Z**) default]
$\overline{\text{PRST}}$/ GP[13]	R5	I/O/Z		PCI reset (**I**) or GP[13] (**I/O/Z**) [default]
$\overline{\text{PGNT}}$/ GP[12]	R4	I/O/Z		or PCI bus grant (**I**) or GP[12] (**I/O/Z**)[default]
$\overline{\text{PCBE0}}$/ GP[2]	P1	I/O/Z		PCI command/byte enable 0 (**I/O/Z**) or GP[2] (**I/O/Z**)[default]
$\overline{\text{PCBE3}}$	P5	I/O/Z		PCI command/byte enable 3 (**I/O/Z**). By default, this pin has no function.
PIDSEL	R3	I		PCI initialization device select (**I**). By default, this pin has no function.
$\overline{\text{PTRDY}}$	P4	I/O/Z		PCI target ready ($\overline{\text{PRTDY}}$) (**I/O/Z**). By default, this pin has no function.
HD31/AD31	AA3	I/O/Z		Host-port data [31:16] pin (**I/O/Z**) [default] or PCI data-address bus [31:16] (**I/O/Z**)
HD30/AD30	AA5			
HD29/AD29	AC4			
HD28/AD28	AA4			
HD27/AD27	AC5			
HD26/AD26	Y1			
HD25/AD25	AD2			
HD24/AD24	W1			
HD23/AD23	AC3			
HD22/AD22	AE1			
HD21/AD21	AD1			
HD20/AD20	W2			
HD19/AD19	AC1			
HD18/AD18	Y2			
HD17/AD17	AB1			
HD16/AD16	Y3			

(6) These pins function as open-drain outputs when configured as PCI pins.

Copyright © 2006–2012, Texas Instruments Incorporated

Table 2-3. Terminal Functions (continued)

SIGNAL NAME	SIGNAL NO.	TYPE[1]	IPD/IPU[2]	DESCRIPTION
HD15/AD15	AB2	I/O/Z		Host-port data [15:0] pin (**I/O/Z**) [default] or PCI data-address bus [15:0] (**I/O/Z**)
HD14/AD14	W4			
HD13/AD13	AC2			
HD12/AD12	V4			
HD11/AD11	AF3			
HD10/AD10	AE3			
HD9/AD9	AB3			
HD8/AD8	W5			
HD7/AD7	AB4			
HD6/AD6	Y4			
HD5/AD5	AD3			
HD4/AD4	Y5			
HD3/AD3	AD4			
HD2/AD2	W6			
HD1/AD1	AB5			
HD0/AD0	AE2			
EMIFA (64-BIT) - CONTROL SIGNALS COMMON TO ALL TYPES OF MEMORY				
ABA1/EMIFA_EN	V25	O/Z	IPD	EMIFA bank address control (ABA[1:0]) • Active-low bank selects for the 64-bit EMIFA. When interfacing to 16-bit Asynchronous devices, ABA1 carries bit 1 of the byte address. For an 8-bit Asynchronous interface, ABA[1:0] are used to carry bits 1 and 0 of the byte address DDR2 Memory Controller enable (DDR2_EN) [**ABA0**] 0 - DDR2 Memory Controller peripheral pins are disabled (default) 1 - DDR2 Memory Controller peripheral pins are enabled EMIFA enable (EMIFA_EN) [**ABA1**] 0 - EMIFA peripheral pins are disabled (default) 1 - EMIFA peripheral pins are enabled
ABA0/DDR2_EN	V26	O/Z	IPD	
$\overline{\text{ACE5}}$	V27	O/Z	IPU	EMIFA memory space enables • Enabled by bits 28 through 31 of the word address • Only one pin is asserted during any external data access Note: The C6454 device does *not* have $\overline{\text{ACE0}}$ and $\overline{\text{ACE1}}$ pins
$\overline{\text{ACE4}}$	V28	O/Z	IPU	
$\overline{\text{ACE3}}$	W26	O/Z	IPU	
$\overline{\text{ACE2}}$	W27	O/Z	IPU	
$\overline{\text{ABE7}}$	W29	O/Z	IPU	EMIFA byte-enable control • Decoded from the low-order address bits. The number of address bits or byte enables used depends on the width of external memory. • Byte-write enables for most types of memory.
$\overline{\text{ABE6}}$	K26	O/Z	IPU	
$\overline{\text{ABE5}}$	L29	O/Z	IPU	
$\overline{\text{ABE4}}$	L28	O/Z	IPU	
$\overline{\text{ABE3}}$	AA29	O/Z	IPU	
$\overline{\text{ABE2}}$	AA28	O/Z	IPU	
$\overline{\text{ABE1}}$	AA25	O/Z	IPU	
$\overline{\text{ABE0}}$	AA26	O/Z	IPU	
EMIFA (64-BIT) - BUS ARBITRATION				
$\overline{\text{AHOLDA}}$	N26	O	IPU	EMIFA hold-request-acknowledge to the host
$\overline{\text{AHOLD}}$	R29	I	IPU	EMIFA hold request from the host
ABUSREQ	L27	O	IPU	EMIFA bus request output
EMIFA (64-BIT) - ASYNCHRONOUS/SYNCHRONOUS MEMORY CONTROL				
AECLKIN	N29	I	IPD	EMIFA external input clock. The EMIFA input clock (AECLKIN or SYSCLK4 clock) is selected at reset via the pullup/pulldown resistor on the AEA[15] pin. Note: AECLKIN is the default for the EMIFA input clock.

Copyright © 2006–2012, Texas Instruments Incorporated

Table 2-3. Terminal Functions (continued)

SIGNAL NAME	NO.	TYPE(1)	IPD/IPU(2)	DESCRIPTION
AECLKOUT	V29	O/Z	IPD	EMIFA output clock [at EMIFA input clock (AECLKIN or SYSCLK4) frequency]
$\overline{\text{AAWE}}$/$\overline{\text{ASWE}}$	AB25	O/Z	IPU	Asynchronous memory write-enable/Programmable synchronous interface write-enable
AARDY	K29	I	IPU	Asynchronous memory ready input
AR/$\overline{\text{W}}$	W25	O/Z	IPU	Asynchronous memory read/write
$\overline{\text{AAOE}}$/$\overline{\text{ASOE}}$	Y28	O/Z	IPU	Asynchronous/Programmable synchronous memory output-enable
$\overline{\text{ASADS}}$/$\overline{\text{ASRE}}$	R26	O/Z	IPU	Programmable synchronous address strobe or read-enable • For programmable synchronous interface, the R_ENABLE field in the Chip Select x Configuration Register selects between $\overline{\text{ASADS}}$ and $\overline{\text{ASRE}}$: – If R_ENABLE = 0, then the $\overline{\text{ASADS}}$/$\overline{\text{ASRE}}$ signal functions as the $\overline{\text{ASADS}}$ signal. – If R_ENABLE = 1, then the $\overline{\text{ASADS}}$/$\overline{\text{ASRE}}$ signal functions as the $\overline{\text{ASRE}}$ signal.
EMIFA (64-BIT) - ADDRESS				
AEA19/BOOTMODE3	N25	O/Z	IPD	EMIFA external address (word address) (**O/Z**) Controls initialization of the DSP modes at reset (**I**) via pullup/pulldown resistors [For more detailed information, see Section 3, *Device Configuration*.] **Note:** If a configuration pin must be routed out from the device and 3-stated (not driven), the internal pullup/pulldown (IPU/IPD) resistor should not be relied upon; TI recommends the use of an external pullup/pulldown resistor. For more detailed information on pullup/pulldown resistors and situations where external pullup/pulldown resistors are required, see Section 3.7, *Pullup/Pulldown Resistors*. • Boot mode - device boot mode configurations (BOOTMODE[3:0]) [**Note:** the peripheral ***must*** be enabled to use the particular boot mode.] **AEA[19:16]**: 0000 - No boot (default mode) 0001 - Host boot (HPI) 0010 -Reserved 0011 - Reserved 0100 - EMIFA 8-bit ROM boot 0101 - Master I2C boot 0110 - Slave I2C boot 0111 - Host boot (PCI) 1000 thru 1111 - Reserved For more detailed information on the boot modes, see Section 2.4, *Boot Sequence*. CFGGP[2:0] pins must be set to 000b during reset for proper operation of the PCI boot mode. • EMIFA input clock source select Clock mode select for EMIFA (AECLKIN_SEL) **AEA15**: 0 - AECLKIN (default mode) 1 - SYSCLK4 (CPU/x) Clock Rate. The SYSCLK4 clock rate is software selectable via the Software PLL1 Controller. By default, SYSCLK4 is selected as CPU/8 clock rate. • HPI peripheral bus width (HPI_WIDTH) select [Applies only when HPI is enabled; PCI_EN pin = 0] **AEA14**: 0 - HPI operates as an HPI16 (default). (HPI bus is 16 bits wide. HD[15:0] pins are used and the remaining HD[31:16] pins are reserved pins in the Hi-Z state.) 1 - HPI operates as an HPI32. • Device Endian mode (LENDIAN) **AEA13**: 0 - System operates in Big Endian mode 1 - System operates in Little Endian mode(default) **Note:** For proper C6454 device operation, the **AEA12** and **AEA11** pins ***must*** be externally pulled down with a 1-kΩ resistor at device reset.
AEA18/BOOTMODE2	L26			
AEA17/BOOTMODE1	L25			
AEA16/BOOTMODE0	P26			
AEA15/AECLKIN_SEL	P27			
AEA14/HPI_WIDTH	R25			
AEA13/LENDIAN	R27	O/Z	IPU	
AEA12	R28	O/Z	IPD	
AEA11	T25			

Copyright © 2006–2012, Texas Instruments Incorporated

Table 2-3. Terminal Functions (continued)

SIGNAL NAME	SIGNAL NO.	TYPE(1)	IPD/IPU(2)	DESCRIPTION
AEA10/MACSEL1	M25	O/Z	IPD	• EMAC/MDIO interface select bits (MACSEL[1:0]) There are two configuration pins — MACSEL[1:0] — to select the EMAC/MDIO interface. **AEA[10:9]**: MACSEL[1:0] 00 - 10/100 EMAC/MDIO MII Mode Interface (default) 01 - 10/100 EMAC/MDIO RMII Mode Interface 10 - 10/100/1000 EMAC/MDIO GMII Mode Interface 11 - 10/100/1000 with RGMII Mode Interface [RGMII interface requires a 1.8-V or 1.5-V I/O supply] • PCI I2C EEPROM Auto-Initialization (PCI_EEAI) **AEA8**: PCI auto-initialization via external I2C EEPROM If the PCI peripheral is disabled (PCI_EN pin = 0), this pin must ***not*** be pulled up. 0 - PCI auto-initialization through I2C EEPROM is disabled (default). 1 - PCI auto-initialization through I2C EEPROM is enabled. • PCI Frequency Selection (PCI66) [The PCI peripheral *needs* be enabled (PCI_EN = 1) to use this function] Selects the PCI operating frequency of 66-MHz or 33-MHz PCI operating frequency is selected at reset via the pullup/pulldown resistor on the PCI66 pin: **AEA6**: 0 - PCI operates at 33 MHz (default). 1 - PCI operates at 66 MHz. Note: If the PCI peripheral is disabled (PCI_EN = 0), this pin must ***not*** be pulled up. • McBSP1 Enable bit (MCBSP1_EN) Selects which function is enabled on the McBSP1/GPIO muxed pins **AEA5**: 0 - GPIO pin functions enabled (default). 1 - McBSP1 pin functions enabled. • SYSCLKOUT Enable pin (SYSCLKOUT_EN) Selects which function is enabled on the SYSCLK4/GP[1] muxed pin **AEA4**: 0 - GP[1] pin function of the SYSCLK4/GP[1] pin enabled (default). 1 - SYSCLK4 pin function of the SYSCLK4/GP[1] pin enabled. • Configuration GPI (CFGGP[2:0]) (**AEA[2:0]**) These pins are latched during reset and their values are shown in the DEVSTAT register. These values can be used by software routines for boot operations. **AEA3**: For proper C6454 device operation, the AEA3 pin ***must*** be pulled down to V_{SS} using a 1-kΩ resistor.
AEA9/MACSEL0	M27			
AEA8/PCI_EEAI	P25			
AEA7	N27			
AEA6/PCI66	U27			
AEA5/MCBSP1_EN	U28			
AEA4/ SYSCLKOUT_EN	T28			
AEA3	T27			
AEA2/CFGGP2	T26			
AEA1/CFGGP1	U26			
AEA0/CFGGP0	U25			

Table 2-3. Terminal Functions (continued)

SIGNAL NAME	NO.	TYPE[1]	IPD/IPU[2]	DESCRIPTION
EMIFA (64-BIT) - DATA				
AED63	F25	I/O/Z	IPU	EMIFA external data
AED62	A27			
AED61	C27			
AED60	C28			
AED59	E27			
AED58	D28			
AED57	D27			
AED56	F27			
AED55	G25			
AED54	G26			
AED53	A28			
AED52	F28			
AED51	B28			
AED50	G27			
AED49	B27			
AED48	G28			
AED47	H25			
AED46	J26			
AED45	H26			
AED44	J27			
AED43	H27			
AED42	J28			
AED41	C29			
AED40	J29			
AED39	D29			
AED38	J25			
AED37	F29			
AED36	F26			
AED35	G29			
AED34	K28			
AED33	K25			
AED32	K27			
AED31	AA27			
AED30	AG29			
AED29	AB29			
AED28	AC27			
AED27	AB28			
AED26	AC26			
AED25	AB27			
AED24	AC25			
AED23	AB26			
AED22	AD28			

Copyright © 2006–2012, Texas Instruments Incorporated

Table 2-3. Terminal Functions (continued)

SIGNAL NAME	SIGNAL NO.	TYPE[1]	IPD/IPU[2]	DESCRIPTION
AED21	AD29	I/O/Z	IPU	EMIFA external data
AED20	AJ28			
AED19	AF29			
AED18	AH28			
AED17	AE29			
AED16	AG28			
AED15	AF28			
AED14	AH26			
AED13	AE28			
AED12	AE26			
AED11	AD26			
AED10	AF27			
AED9	AG27			
AED8	AD27			
AED7	AE25			
AED6	AJ27			
AED5	AJ26			
AED4	AE27			
AED3	AG25			
AED2	AH27			
AED1	AF25			
AED0	AD25			
DDR2 MEMORY CONTROLLER (32-BIT) - CONTROL SIGNALS COMMON TO ALL TYPES OF MEMORY				
$\overline{\text{DCE0}}$	E14	O/Z		DDR2 Memory Controller memory space enable. When the DDR2 Memory Controller is enabled, it always keeps this pin low.
DBA2	E15	O/Z		DDR2 Memory Controller bank address control
DBA1	D15	O/Z		
DBA0	C15	O/Z		
DDR2CLKOUT	B14	O/Z		DDR2 Memory Controller output clock (CLKIN2 frequency × 10)
$\overline{\text{DDR2CLKOUT}}$	A14	O/Z		Negative DDR2 Memory Controller output clock (CLKIN2 frequency × 10)
$\overline{\text{DSDCAS}}$	D13	O/Z		DDR2 Memory Controller SDRAM column-address strobe
$\overline{\text{DSDRAS}}$	C13	O/Z		DDR2 Memory Controller SDRAM row-address strobe
$\overline{\text{DSDWE}}$	B13	O/Z		DDR2 Memory Controller SDRAM write-enable
DSDCKE	D14	O/Z		DDR2 Memory Controller SDRAM clock-enable (used for self-refresh mode)
DEODT1	A17	O/Z		On-die termination signals to external DDR2 SDRAM. These pins should not be connected to the DDR2 SDRAM. **Note:** There are no on-die termination resistors implemented on the C6454 DSP die.
DEODT0	E16	O/Z		
DSDDQGATE3	F21	I		DDR2 Memory Controller data strobe gate [3:0] For hookup of these signals, see the *Implementing DDR2 PCB Layout on the TMS320C6455/5* application report (literature number SPRAAA7).
DSDDQGATE2	E21	O/Z		
DSDDQGATE1	B9	I		
DSDDQGATE0	A9	O/Z		
DSDDQM3	C23	O/Z		DDR2 Memory Controller byte-enable controls • Decoded from the low-order address bits. The number of address bits or byte enables used depends on the width of external memory. • Byte-write enables for most types of memory. • Can be directly connected to SDRAM read and write mask signal (SDQM).
DSDDQM2	C20	O/Z		
DSDDQM1	C8	O/Z		
DSDDQM0	C11	O/Z		

Table 2-3. Terminal Functions (continued)

SIGNAL NAME	NO.	TYPE(1)	IPD/IPU(2)	DESCRIPTION
DSDDQS3	E23	I/O/Z		DDR2 Memory Controller data strobe [3:0] positive
DSDDQS2	E20	I/O/Z		
DSDDQS1	E8	I/O/Z		
DSDDQS0	E11	I/O/Z		
$\overline{\text{DSDDQS3}}$	D23	I/O/Z		DDR2 data strobe [3:0] negative **Note:** These pins are used to meet AC timings. For more detailed information, see the *Implementing DDR2 PCB Layout on the TMS320C6454/5* application report (literature number SPRAAA7).
$\overline{\text{DSDDQS2}}$	D20	I/O/Z		
$\overline{\text{DSDDQS1}}$	D8	I/O/Z		
$\overline{\text{DSDDQS0}}$	D11	I/O/Z		
DDR2 MEMORY CONTROLLER (32-BIT) - ADDRESS				
DEA13	B15	O/Z		DDR2 Memory Controller external address
DEA12	A15			
DEA11	A16			
DEA10	B16			
DEA9	C16			
DEA8	D16			
DEA7	B17			
DEA6	C17			
DEA5	D17			
DEA4	E17			
DEA3	A18			
DEA2	B18			
DEA1	C18			
DEA0	D18			

Copyright © 2006–2012, Texas Instruments Incorporated

Table 2-3. Terminal Functions (continued)

SIGNAL NAME	NO.	TYPE[1]	IPD/IPU[2]	DESCRIPTION
DDR2 MEMORY CONTROLLER (32-BIT) - DATA				
DED31	B25	I/O/Z		DDR2 Memory Controller external data
DED30	A25			
DED29	B24			
DED28	A24			
DED27	D22			
DED26	C22			
DED25	B22			
DED24	A22			
DED23	D21			
DED22	C21			
DED21	B21			
DED20	A21			
DED19	D19			
DED18	C19			
DED17	A19			
DED16	B19			
DED15	C7			
DED14	D7			
DED13	A7			
DED12	B7			
DED11	F9			
DED10	E9			
DED9	D9			
DED8	C9			
DED7	D10			
DED6	C10			
DED5	B10			
DED4	A10			
DED3	D12			
DED2	C12			
DED1	B12			
DED0	A12			
TIMER 1				
TOUTL1	AG7	O/Z	IPD	Timer 1 output pin for lower 32-bit counter
TINPL1	AJ6	I	IPD	Timer 1 input pin for lower 32-bit counter
TIMER 0				
TOUTL0	AF8	O/Z	IPD	Timer 0 output pin for lower 32-bit counter
TINPL0	AH6	I	IPD	Timer 0 input pin for lower 32-bit counter
INTER-INTEGRATED CIRCUIT (I2C)				
SCL	AG26	I/O/Z		I2C clock. When the I2C module is used, use an external pullup resistor.
SDA	AF26	I/O/Z		I2C data. When I2C is used, ensure there is an external pullup resistor.

Copyright © 2006–2012, Texas Instruments Incorporated

Table 2-3. Terminal Functions (continued)

SIGNAL NAME	SIGNAL NO.	TYPE(1)	IPD/IPU(2)	DESCRIPTION
MULTICHANNEL BUFFERED SERIAL PORT 1 AND MULTICHANNEL BUFFERED SERIAL PORT 0 (McBSP1 and McBSP0)				
CLKS	AJ4	I	IPD	McBSP external clock source (as opposed to internal) (**I**) [shared by McBSP1 and McBSP0]
MULTICHANNEL BUFFERED SERIAL PORT 1 (McBSP1)				
CLKR1/GP[0]	AF4	I/O/Z	IPD	McBSP1 receive clock (**I/O/Z**) or GP[0] (**I/O/Z**) [default]
FSR1/GP[10]	AE5	I/O/Z	IPD	McBSP1 receive frame sync (**I/O/Z**) or GP[10] (**I/O/Z**) [default]
DR1/GP[8]	AH5	I/O/Z	IPD	McBSP1 receive data (**I**) or GP[8] (**I/O/Z**) [default]
DX1/GP[9]	AG5	I/O/Z	IPD	McBSP1 transmit data (**O/Z**) or GP[9] (**I/O/Z**) [default]
FSX1/GP[11]	AG4	I/O/Z	IPD	McBSP1 transmit frame sync (**I/O/Z**) or GP[11] (**I/O/Z**) [default]
CLKX1/GP[3]	AF5	I/O/Z	IPD	McBSP1 transmit clock (**I/O/Z**) or GP[3] (**I/O/Z**) [default]
MULTICHANNEL BUFFERED SERIAL PORT 0 (McBSP0)				
CLKR0	AG1	I/O/Z	IPU	McBSP0 receive clock (**I/O/Z**)
FSR0	AH3	I/O/Z	IPD	McBSP0 receive frame sync (**I/O/Z**)
DR0	AJ5	I	IPD	McBSP0 receive data (**I**)
DX0	AF6	I/O/Z	IPD	McBSP0 transmit data (**O/Z**)
FSX0	AJ3	I/O/Z	IPD	McBSP0 transmit frame sync (**I/O/Z**)
CLKX0	AG6	I/O/Z	IPU	McBSP0 transmit clock (**I/O/Z**)
MANAGEMENT DATA INPUT/OUTPUT (MDIO) FOR MII/RMII/GMII				
MDCLK	M5	I/O/Z	IPD	MDIO serial clock (MDCLK) for MII/RMII/GMII mode (**O**)
MDIO	N3	I/O/Z	IPU	MDIO serial data (MDIO) for MII/RMII/GMII mode (**I/O**)
MANAGEMENT DATA INPUT/OUTPUT (MDIO) FOR RGMII				
RGMDCLK	B4	O/Z		MDIO serial clock (RGMII mode) (RGMDCLK) (**O**)
RGMDIO	A4	I/O/Z		MDIO serial data (RGMII mode) (RGMDIO) (**I/O**)
ETHERNET MAC (EMAC) [MII/RMII/GMII]				
There are two configuration pins - the MAC_SEL[1:0] (AEA[10:9] pins) - that select one of the four interface modes (MII, RMII, GMII, or RGMII) for the EMAC/MDIO interface. For more detailed information on the EMAC configuration pins, see Section 3, *Device Configuration*.				
MRCLK	H1	I		This pin is EMAC receive clock (MRCLK) for MII [default] or GMII. MACSEL[1:0] dependent.
MCRS/ RMCRSDV	J4	I/O/Z		This pin is EMAC carrier sense (MCRS) (**I**) for MII [default] or GMII, or EMAC carrier sense/receive data valid (RMCRSDV) (**I**) for RMII. MACSEL[1:0] dependent.
MRXER/ RMRXER	H4	I		This pin is EMAC receive error (MRXIR) (**I**) for MII [default], RMII, or GMII. MACSEL[1:0] dependent.
MRXDV	H5	I		This pin is EMAC MII [default] or GMII receive data valid (MRXDV) (**I**). MACSEL[1:0] dependent.
MRXD7	M2	I		EMAC receive data bus for MII [default], RMII, or GMII These pins function as EMAC receive data pins for MII [default], RMII, or GMII (MRXD[x:0]) (**I**). MACSEL[1:0] dependent.
MRXD6	H2			
MRXD5	L2			
MRXD4	L1			
MRXD3	J3			
MRXD2	J1			
MRXD1/ RMRXD1	H3			
MRXD0/ RMRXD0	J2			
GMTCLK	K5	O/Z		This pin is EMAC GMII transmit clock (GMTCLK) (**O**). MACSEL[1:0] dependent.
MTCLK/ RMREFCLK	N4	I		This pin is either EMAC MII [default] or GMII transmit clock (MTCLK) (**I**) or the EMAC RMII reference clock (RMREFCLK) (**I**). The EMAC function is controlled by the MACSEL[1:0] (AEA[10:9] pins). For more detailed information, see Section 3, *Device Configuration*.

Copyright © 2006–2012, Texas Instruments Incorporated

Table 2-3. Terminal Functions (continued)

SIGNAL NAME	SIGNAL NO.	TYPE[1]	IPD/IPU[2]	DESCRIPTION
MCOL	K3	I/O/Z		This pin is the EMAC collision sense (MCDL) (**I**) for MII [default] or GMII. MACSEL[1:0] dependent.
MTXEN/ RMTXEN	J5	I/O/Z		This pin is either the EMAC transmit enable (MTXEN) (**O**) for MII [default], RMII, or GMII. MACSEL[1:0] dependent.
MTXD7	N5	O/Z		EMAC transmit data bus for MII [default], RMII, or GMII. These pins function as EMAC transmit data pins (MTXD[x:0]) (**O**) for MII, RMII, or GMII. MACSEL[1:0] dependent.
MTXD6	M3			
MTXD5	L5			
MTXD4	L3			
MTXD3	K4			
MTXD2	M4			
MTXD1/ RMTXD1	L4			
MTXD0/ RMTXD0	M1			

Table 2-3. Terminal Functions (continued)

SIGNAL NAME	SIGNAL NO.	TYPE(1)	IPD/IPU(2)	DESCRIPTION
ETHERNET MAC (EMAC) [RGMII]				
There are two configuration pins - the MAC_SEL[1:0] (AEA[10:9] pins) - that select one of the four interface modes (MII, RMII, GMII, or RGMII) for the EMAC/MDIO interface. For more detailed information on the EMAC configuration pins, see Section 3, *Device Configuration*.				
RGREFCLK	C4	O/Z		RGMII reference clock (**O**). This 125-MHz reference clock is provided as a convenience. It can be used as a clock source to a PHY, so that the PHY may generate RXC clock to communicate with the EMAC. This clock is stopped while the device is in reset. This pin is available only when RGMII mode is selected (MACSEL[1:0] =11).
RGTXC	D4	O/Z		RGMII transmit clock (**O**). This pin is available only when RGMII mode is selected (MACSEL[1:0] =11).
RGTXD3	A2	O/Z		RGMII transmit data [3:0] (**O**). This pin is available only when RGMII mode is selected (MACSEL[1:0] =11).
RGTXD2	C3			
RGTXD1	B3			
RGTXD0	A3			
RGTXCTL	D3	O/Z		RGMII transmit enable (**O**). This pin is available only when RGMII mode is selected (MACSEL[1:0] =11).
RGRXC	E3	I		RGMII receive clock (**I**). This pin is available only when RGMII mode is selected (MACSEL[1:0] =11).
RGRXD3	C1	I		RGMII receive data [3:0] (**I**). This pin is available only when RGMII mode is selected (MACSEL[1:0] =11).
RGRXD2	E4	I		
RGRXD1	E2	I		
RGRXD0	E1	I		
RGRXCTL	C2	I		RGMII receive control (**I**). This pin is available only when RGMII mode is selected (MACSEL[1:0] =11).
RESERVED FOR TEST				
RSV02	V5			Reserved. These pins must be connected directly to core supply (CV_{DD}) for proper device operation.
RSV03	W3			
RSV04	N11			
RSV05	P11			
RSV07	G4	I		Reserved. This pin must be connected directly to 1.5-/1.8-V I/O supply (DV_{DD15}) for proper device operation. **NOTE:** If the EMAC RGMII is not used, these pins can be connected directly to ground (V_{SS}).
RSV09	D26	I		Reserved. This pin must be connected directly to the 1.8-V I/O supply (DV_{DD18}) for proper device operation.
RSV11	D24			Reserved. This pin must be connected to ground (V_{SS}) via a 200-Ω resistor for proper device operation. **NOTE:** If the DDR2 Memory Controller is not used, the $V_{REFSSTL}$, RSV11, and RSV12 pins can be connected directly to ground (V_{SS}) to save power. However, connecting these pins directly to ground will prevent boundary-scan from functioning on the DDR2 Memory Controller pins. To preserve boundary-scan functionality on the DDR2 Memory Controller pins, see Section 7.3.4.
RSV12	C24			Reserved. This pin must be connected to the 1.8-V I/O supply (DV_{DD18}) via a 200-Ω resistor for proper device operation. **NOTE:** If the DDR2 Memory Controller is not used, the $V_{REFSSTL}$, RSV11, and RSV12 pins can be connected directly to ground (V_{SS}) to save power. However, connecting these pins directly to ground will prevent boundary-scan from functioning on the DDR2 Memory Controller pins. To preserve boundary-scan functionality on the DDR2 Memory Controller pins, see Section 7.3.4.
RSV13	F2			Reserved. This pin must be connected to ground (V_{SS}) via a 200-Ω resistor for proper device operation. **NOTE:** If the RGMII mode of the EMAC is not used, the DV_{DD15}, $V_{REFHSTL}$, RSV13, and RSV14 pins can be connected to directly ground (V_{SS}) to save power. However, connecting these pins directly to ground will prevent boundary-scan from functioning on the RGMII pins of the EMAC. To preserve boundary-scan functionality on the RGMII pins, see Section 7.3.4.

Copyright © 2006–2012, Texas Instruments Incorporated

Table 2-3. Terminal Functions (continued)

SIGNAL NAME	SIGNAL NO.	TYPE(1)	IPD/IPU(2)	DESCRIPTION
RSV14	F1			Reserved. This pin must be connected to the 1.5/1.8-V I/O supply (DV_{DD15}) via a 200-Ω resistor for proper device operation. **NOTE:** If the RGMII mode of the EMAC is not used, the DV_{DD15}, $V_{REFHSTL}$, RSV13, and RSV14 pins can be connected to directly ground (V_{SS}) to save power. However, connecting these pins directly to ground will prevent boundary-scan from functioning on the RGMII pins of the EMAC. To preserve boundary-scan functionality on the RGMII pins, see Section 7.3.4.
RSV15	T1			Reserved. This pin must be connected via a 39-Ω resistor directly to ground (V_{SS}) for proper device operation. The resistor used should have a minimal rating of 1/10 W.
RSV16	T2			Reserved. This pin must be connected via a 20-Ω resistor directly to 3.3-V I/O Supply (DV_{DD33}) for proper device operation. The resistor used should have a minimal rating of 1/10 W.
RSV17	AE21	A		Reserved. (Leave unconnected, do not connect to power or ground.)
RSV18	E13	A		
RSV19	F18	A		
RSV20	U29	A		
RSV21	A6	A		
RSV22	B26	O		
RSV23	C26	O		
RSV24	B6	O		
RSV25	C6	O		
RSV26	AJ11	A		
RSV27	AH11	A		
RSV36	AD11	I/O/Z	IPU	
RSV37	AD9	I/O/Z	IPU	
RSV38	AG10	I/O/Z	IPU	
RSV39	AG11	I/O/Z	IPU	
RSV40	AJ12	I/O/Z	IPU	
RSV41	W28	O/Z	IPU	
RSV42	Y26	O/Z	IPU	
RSV43	Y25	O/Z	IPU	
RSV44	Y27	O/Z		

Copyright © 2006–2012, Texas Instruments Incorporated

Table 2-3. Terminal Functions (continued)

SIGNAL NAME	SIGNAL NO.	TYPE(1)	IPD/IPU(2)	DESCRIPTION
RSV45	AF15	I		Reserved. (Leave unconnected, do not connect to power or ground.)
RSV46	AG15	I		
RSV47	AF17	O/Z		
RSV48	AG18	O/Z		
RSV49	AG22	O/Z		
RSV50	AF23	O/Z		
RSV51	AF18	O/Z		
RSV52	AG19	O/Z		
RSV53	AG21	O/Z		
RSV54	AF22	O/Z		
RSV55	AH18	I		
RSV56	AJ18	I		
RSV57	AJ22	I		
RSV58	AH22	I		
RSV59	AH17	I		
RSV60	AJ19	I		
RSV61	AJ21	I		
RSV62	AH23	I		
RSV28	N7	A		Reserved. These pins must be connected directly to V_{SS} for proper device operation.
RSV29	N6	A		
RSV30	P23	A		
RSV31	P24	A		
RSV32	D25			Reserved. This pin must be connected to the 1.8-V I/O supply (DV_{DD18}) via a 1-kΩ resistor for proper device operation.
RSV33	C25			Reserved. This pin must be connected directly to ground for proper device operation.
RSV34	E6			Reserved. This pin must be connected to the 1.8-V I/O supply (DV_{DD18}) via a 1-kΩ resistor for proper device operation.
RSV35	D6			Reserved. This pin must be connected directly to ground for proper device operation.
RSV63	AD20	I		Reserved. These pins must be connected directly to V_{SS} for proper device operation.
RSV64	AC15	I		
RSV65	AC17	I		
RSV66	AD16	I		
RSV67	U16	I		
RSV68	V15	I		
RSV69	V17	I		
RSV70	W16	I		
RSV71	W18	I		
RSV72	AE17	I		
RSV73	AE19	I		
RSV74	AE23	I		
RSV75	AF20	I		
RSV76	AH20	I		
RSV77	AJ17	I		
RSV78	AJ23	I		

Copyright © 2006–2012, Texas Instruments Incorporated

Table 2-3. Terminal Functions (continued)

SIGNAL NAME	NO.	TYPE(1)	IPD/IPU(2)	DESCRIPTION
SUPPLY VOLTAGE MONITOR PINS				
CV_{DDMON}	N1			Die-side 1.2-V core supply (CV_{DD}) voltage monitor pin. The monitor pins indicate the voltage on the die and, therefore, provide the best probe point for voltage monitoring purposes. If the CV_{DDMON} pin is not used, it should be connected directly to the 1.2-V core supply (CV_{DD}).
$DV_{DD33MON}$	L6			Die-side 3.3-V I/O supply (DV_{DD33}) voltage monitor pin. The monitor pins indicate the voltage on the die and, therefore, provide the best probe point for voltage monitoring purposes. If the $DV_{DD33MON}$ pin is not used, it should be connected directly to the 3.3-V I/O supply (DV_{DD33}).
$DV_{DD15MON}$	F3	I		Die-side 1.5-/1.8-V I/O supply (DV_{DD15}) voltage monitor pin. The monitor pins indicate the voltage on the die and, therefore, provide the best probe point for voltage monitoring purposes. If the $DV_{DD15MON}$ pin is not used, it should be connected directly to the 1.5-/1.8-V I/O supply (DV_{DD15}). **NOTE:** If the RGMII mode of the EMAC is not used, the DV_{DD15}, $DV_{DD15MON}$, $V_{REFHSTL}$, RSV13, and RSV14 pins can be connected directly to ground (V_{SS}) to save power. However, connecting these pins directly to ground will prevent boundary-scan from functioning on the RGMII pins of the EMAC. To preserve boundary-scan functionality on the RGMII pins, see Section 7.3.4.
$DV_{DD18MON}$	A26			Die-side 1.8-V I/O supply (DV_{DD18}) voltage monitor pin. The monitor pins indicate the voltage on the die and, therefore, provide the best probe point for voltage monitoring purposes. If the $DV_{DD18MON}$ pin is not used, it should be connected directly to the 1.8-V I/O supply (DV_{DD18}).
SUPPLY VOLTAGE PINS				
$V_{REFSSTL}$	C14	A		(DV_{DD18}/2)-V reference for SSTL buffer (DDR2 Memory Controller). This input voltage can be generated directly from DV_{DD18} using two 1-kΩ resistors to form a resistor divider circuit. **NOTE:** The DDR2 Memory Controller is not used, the $V_{REFSSTL}$, RSV11, and RSV12 pins can be connected directly to ground (V_{SS}) to save power. However, connecting these pins directly to ground will prevent boundary-scan from functioning on the DDR2 Memory Controller pins. To preserve boundary-scan functionality on the DDR2 Memory Controller pins, see Section 7.3.4.
$V_{REFHSTL}$	B2	A		(DV_{DD15}/2)-V reference for HSTL buffer (EMAC RGMII). $V_{REFHSTL}$ can be generated directly from DV_{DD15} using two 1-kΩ resistors to form a resistor divider circuit. **NOTE:** If the RGMII mode of the EMAC is not used, the DV_{DD15}, $V_{REFHSTL}$, RSV13, and RSV14 pins can be connected to directly ground (V_{SS}) to save power. However, connecting these pins directly to ground will prevent boundary-scan from functioning on the RGMII pins of the EMAC. To preserve boundary-scan functionality on the RGMII pins, see Section 7.3.4.
AV_{DLL1}	A13	A		1.8-V I/O supply voltage.
AV_{DLL2}	E18			
DV_{DD15}	A1	S		1.8-V or 1.5-V I/O supply voltage for the RGMII function of the EMAC. **NOTE:** If the RGMII mode of the EMAC is not used, the DV_{DD15}, $V_{REFHSTL}$, RSV13, and RSV14 pins can be connected to directly ground (V_{SS}) to save power. However, connecting these pins directly to ground will prevent boundary-scan from functioning on the RGMII pins of the EMAC. To preserve boundary-scan functionality on the RGMII pins, see Section 7.3.4.
	B5			
	D2			
	D5			
	F5			
	G6			
	H7			

Copyright © 2006–2012, Texas Instruments Incorporated

Table 2-3. Terminal Functions (continued)

SIGNAL NAME	NO.	TYPE[1]	IPD/IPU[2]	DESCRIPTION
DV_{DD18}	B8	S		1.8-V I/O supply voltage (DDR2 Memory Controller)
	B11			
	B20			
	B23			
	E10			
	E12			
	E22			
	E24			
	F7			
	F11			
	F13			
	F15			
	F17			
	F19			
	F23			
	G8			
	G10			
	G12			
	G14			
	G16			
	G18			
	G20			
	G22			
	G24			

Copyright © 2006–2012, Texas Instruments Incorporated

Table 2-3. Terminal Functions (continued)

SIGNAL NAME	NO.	TYPE[1]	IPD/IPU[2]	DESCRIPTION
	A29			
	E26			
	E28			
	G2			
	H23			
	H28			
	J6			
	J24			
	K1			
	K7			
	K23			
	L24			
	M7			
	M23			
	M28			
	N24			
	P6			
	P28			
	R1			
	R6			
	R23			
DV_{DD33}	T7	S		3.3-V I/O supply voltage
	T24			
	U23			
	V1			
	V7			
	V24			
	W23			
	Y7			
	Y24			
	AA1			
	AA6			
	AA23			
	AB7			
	AB24			
	AC6			
	AC9			
	AC11			
	AC13			
	AC19			
	AC21			
	AC23			
	AC29			

Copyright © 2006–2012, Texas Instruments Incorporated

Table 2-3. Terminal Functions (continued)

SIGNAL NAME	NO.	TYPE[1]	IPD/IPU[2]	DESCRIPTION
DV_{DD33}	AD5	S		3.3-V I/O supply voltage
	AD7			
	AD14			
	AD18			
	AD22			
	AD24			
	AE6			
	AE8			
	AE15			
	AF1			
	AF16			
	AF24			
	AG12			
	AG17			
	AG23			
	AH14			
	AH16			
	AH24			
	AJ1			
	AJ7			
	AJ15			
	AJ25			
	AJ29			
CV_{DD}	L12	S		1.25-V core supply voltage (-1000 devices) 1.2-V core supply voltage (-850 and -720 devices)
	L14			
	L16			
	L18			
	M11			
	M13			
	M15			
	M17			
	M19			
	N12			
	N14			
	N16			
	N18			
	P13			
	P15			
	P17			
	P19			
	R12			
	R14			
	R16			

Copyright © 2006–2012, Texas Instruments Incorporated

Table 2-3. Terminal Functions (continued)

SIGNAL NAME	NO.	TYPE(1)	IPD/IPU(2)	DESCRIPTION
CV_{DD}	R18	S		1.25-V core supply voltage (-1000 devices) 1.2-V core supply voltage (-850 and -720 devices)
	T11			
	T13			
	T15			
	T17			
	T19			
	U12			
	U14			
	U18			
	V11			
	V13			
	V19			
	W12			
	W14			
GROUND PINS				
V_{SS}	A8	GND		Ground pins
	A11			
	A20			
	A23			
	B1			
	B29			
	C5			
	D1			
	E5			
	E7			
	E19			
	E25			
	E29			
	F4			
	F6			
	F8			
	F10			
	F12			
	F14			
	F16			

Copyright © 2006–2012, Texas Instruments Incorporated

Table 2-3. Terminal Functions (continued)

SIGNAL NAME	NO.	TYPE(1)	IPD/IPU(2)	DESCRIPTION
V_{SS}	F20	GND		Ground pins
	F22			
	F24			
	G1			
	G5			
	G7			
	G9			
	G11			
	G13			
	G15			
	G17			
	G19			
	G21			
	G23			
	H6			
	H24			
	H29			
	J7			
	J23			
	K2			
	K6			
	K24			
	L7			
	L11			
	L13			
	L15			
	L17			
	L19			
	L23			
	M6			
	M12			
	M14			

Copyright © 2006–2012, Texas Instruments Incorporated

Table 2-3. Terminal Functions (continued)

SIGNAL NAME	NO.	TYPE[1]	IPD/IPU[2]	DESCRIPTION
V_{SS}	M16	GND		Ground pins
	M18			
	M24			
	M26			
	M29			
	N2			
	N13			
	N15			
	N17			
	N19			
	N23			
	P7			
	P12			
	P14			
	P16			
	P18			
	P29			
	R2			
	R7			
	R11			
	R13			
	R15			
	R17			
	R19			
	R24			
	T6			
	T12			
	T14			
	T16			
	T18			
	T23			
	U7			
	U11			
	U13			

Copyright © 2006–2012, Texas Instruments Incorporated

Table 2-3. Terminal Functions (continued)

SIGNAL NAME	NO.	TYPE(1)	IPD/IPU(2)	DESCRIPTION
V_{SS}	U15	GND		Ground pins
	U17			
	U19			
	U24			
	V2			
	V6			
	V12			
	V14			
	V16			
	V18			
	V23			
	W7			
	W11			
	W13			
	W15			
	W17			
	W19			
	W24			
	Y6			
	Y23			
	AA2			
	AA7			
	AA24			
	AB6			
	AB23			
	AC7			
	AC8			
	AC10			
	AC12			
	AC14			
	AC16			
	AC18			

Copyright © 2006–2012, Texas Instruments Incorporated

Table 2-3. Terminal Functions (continued)

SIGNAL NAME	NO.	TYPE[1]	IPD/IPU[2]	DESCRIPTION
V_{SS}	AC20	GND		Ground pins
	AC22			
	AC24			
	AC28			
	AD6			
	AD13			
	AD15			
	AD17			
	AD19			
	AD21			
	AD23			
	AE4			
	AE7			
	AE16			
	AE18			
	AE20			
	AE22			
	AE24			
	AF2			
	AF19			
	AF21			
	AG13			
	AG16			
	AG20			
	AG24			
	AH1			
	AH15			
	AH19			
	AH21			
	AH25			
	AH29			
	AJ8			
	AJ14			
	AJ16			
	AJ20			
	AJ24			

Copyright © 2006–2012, Texas Instruments Incorporated

2.8 Development

2.8.1 Development Support

In case the customer would like to develop their own features and software on the C6454 device, TI offers an extensive line of development tools for the TMS320C6000™ DSP platform, including tools to evaluate the performance of the processors, generate code, develop algorithm implementations, and fully integrate and debug software and hardware modules. The tool's support documentation is electronically available within the Code Composer Studio™ Integrated Development Environment (IDE).

The following products support development of C6000™ DSP-based applications:

Software Development Tools: Code Composer Studio™ Integrated Development Environment (IDE): including Editor C/C++/Assembly Code Generation, and Debug plus additional development tools Scalable, Real-Time Foundation Software (DSP/BIOS™), which provides the basic run-time target software needed to support any DSP application.

Hardware Development Tools: Extended Development System (XDS™) Emulator (supports C6000™ DSP multiprocessor system debug) EVM (Evaluation Module)

2.8.2 Device Support

2.8.2.1 Device and Development-Support Tool Nomenclature

To designate the stages in the product development cycle, TI assigns prefixes to the part numbers of all DSP devices and support tools. Each DSP commercial family member has one of three prefixes: TMX, TMP, or TMS (e.g., **TMS**320C6454GTZ). Texas Instruments recommends two of three possible prefix designators for its support tools: TMDX and TMDS. These prefixes represent evolutionary stages of product development from engineering prototypes (TMX/TMDX) through fully qualified production devices/tools (TMS/TMDS).

Device development evolutionary flow:

TMX Experimental device that is not necessarily representative of the final device's electrical specifications.

TMP Final silicon die that conforms to the device's electrical specifications but has not completed quality and reliability verification.

TMS Fully qualified production device.

Support tool development evolutionary flow:

TMDX Development-support product that has not yet completed Texas Instruments internal qualification testing.

TMDS Fully qualified development-support product.

TMX and TMP devices and TMDX development-support tools are shipped with against the following disclaimer:

"Developmental product is intended for internal evaluation purposes."

TMS devices and TMDS development-support tools have been characterized fully, and the quality and reliability of the device have been demonstrated fully. TI's standard warranty applies.

Predictions show that prototype devices (TMX or TMP) have a greater failure rate than the standard production devices. Texas Instruments recommends that these devices not be used in any production system because their expected end-use failure rate still is undefined. Only qualified production devices are to be used.

Copyright © 2006–2012, Texas Instruments Incorporated

TI device nomenclature also includes a suffix with the device family name. This suffix indicates the package type (for example, GTZ), the temperature range (for example, blank is the default commercial temperature range), and the device speed range, in megahertz (for example, blank is 1000 MHz [1 GHz]). Figure 2-12 provides a legend for reading the complete device name for any TMS320C64x+™ DSP generation member.

For device part numbers and further ordering information for TMS320C6454 in the CTZ/GTZ/ZTZ package type, see the TI website (www.ti.com) or contact your TI sales representative.

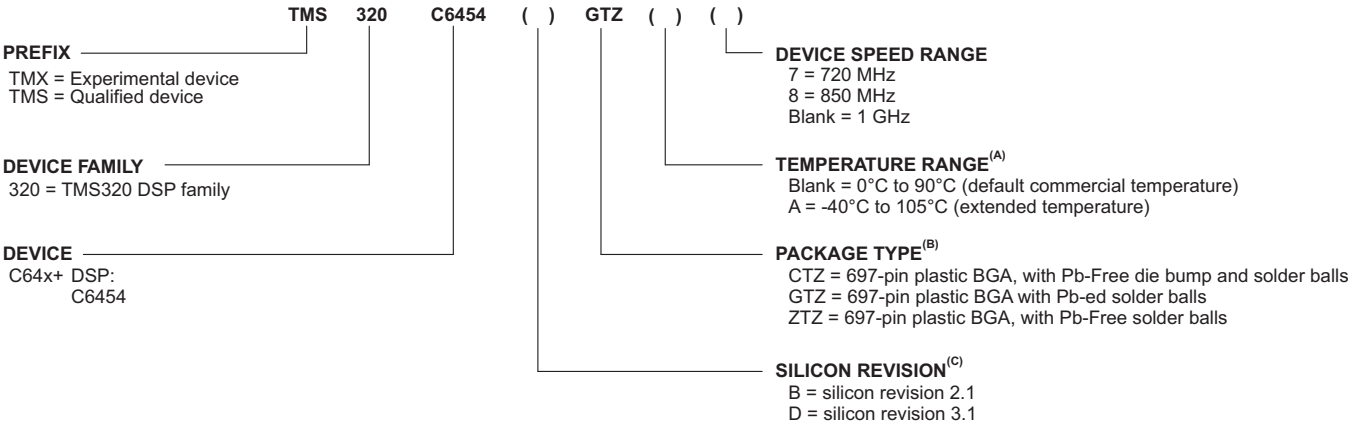

A. The extended temperature "A version" devices may have different operating conditions than the commercial temperature devices. For more details, see Section 6.2, *Recommended Operating Conditions*.

B. BGA = Ball Grid Array

C. For silicon revision information, see the *TMS320C6455/54 Digital Signal Processor Silicon Errata* (literature number SPRZ234).

Figure 2-12. TMS320C64x+™ DSP Device Nomenclature (including the TMS320C6454 DSP)

2.8.2.2 Documentation Support

The following documents describe the TMS320C6454 Fixed-Point Digital Signal Processor. Copies of these documents are available on the Internet at www.ti.com. *Tip:* Enter the literature number in the search box provided at www.ti.com.

SPRU871 ***TMS320C64x+ DSP Megamodule Reference Guide.*** Describes the TMS320C64x+ digital signal processor (DSP) megamodule. Included is a discussion on the internal direct memory access (IDMA) controller, the interrupt controller, the power-down controller, memory protection, bandwidth management, and the memory and cache.

SPRU732 ***TMS320C64x/C64x+ DSP CPU and Instruction Set Reference Guide.*** Describes the CPU architecture, pipeline, instruction set, and interrupts for the TMS320C64x and TMS320C64x+ digital signal processors (DSPs) of the TMS320C6000 DSP family. The C64x/C64x+ DSP generation comprises fixed-point devices in the C6000 DSP platform. The C64x+ DSP is an enhancement of the C64x DSP with added functionality and an expanded instruction set.

SPRAA84 ***TMS320C64x to TMS320C64x+ CPU Migration Guide.*** Describes migrating from the Texas Instruments TMS320C64x digital signal processor (DSP) to the TMS320C64x+ DSP. The objective of this document is to indicate differences between the two cores. Functionality in the devices that is identical is not included.

SPRU889 ***High-Speed DSP Systems Design Reference Guide.*** Provides recommendations for meeting the many challenges of high-speed DSP system design. These recommendations include information about DSP audio, video, and communications systems for the C5000 and C6000 DSP platforms.

SPRU971 ***TMS320C645x DSP External Memory Interface (EMIF) User's Guide.*** This document describes the operation of the external memory interface (EMIF) in the TMS320C645x DSPs.

Copyright © 2006–2012, Texas Instruments Incorporated

SPRU970 ***TMS320C645x DSP DDR2 Memory Controller User's Guide.*** This document describes the DDR2 memory controller in the TMS320C645x digital-signal processors (DSPs).

SPRU969 ***TMS320C645x DSP Host Port Interface (HPI) User's Guide.*** This guide describes the host port interface (HPI) on the TMS320C645x digital signal processors (DSPs). The HPI enables an external host processor (host) to directly access DSP resources (including internal and external memory) using a 16-bit (HPI16) or 32-bit (HPI32) interface.

SPRUEC6 ***TMS320C645x/C647x Bootloader User's Guide.*** This document describes the features of the on-chip Bootloader provided with the TMS320C645x/C647x digital signal processors (DSPs). Included are descriptions of the available boot modes and any interfacing requirements associated with them, instructions on generating the boot table, and information on the different versions of the Bootloader.

SPRU966 ***TMS320C645x DSP Enhanced DMA (EDMA3) Controller User's Guide.*** This document describes the Enhanced DMA (EDMA3) Controller on the TMS320C645x digital signal processors (DSPs).

SPRU580 ***TMS320C6000 DSP Multichannel Buffered Serial Port (McBSP) Reference Guide.*** Describes the operation of the multichannel buffered serial port (McBSP) in the digital signal processors (DSPs) of the TMS320C6000 DSP family. The McBSP consists of a data path and a control path that connect to external devices. Separate pins for transmission and reception communicate data to these external devices. The C6000 CPU communicates to the McBSP using 32-bit-wide control registers accessible via the internal peripheral bus.

SPRU975 ***TMS320C645x DSP EMAC/MDIO Module User's Guide.*** This document provides a functional description of the Ethernet Media Access Controller (EMAC) and Physical layer (PHY) device Management Data Input/Output (MDIO) module integrated with the TMS320C645x digital signal processors (DSPs).

SPRUE60 ***TMS320C645x DSP Peripheral Component Interconnect (PCI) User's Guide.*** This document describes the peripheral component interconnect (PCI) port in the TMS320C645x digital signal processors (DSPs). See the PCI Specification revision 2.3 for details on the PCI interface.

SPRUE56 ***TMS320C645x DSP Software-Programmable Phase-Locked Loop (PLL) Controller User's Guide.*** This document describes the operation of the software-programmable phase-locked loop (PLL) controller in the TMS320C645x digital signal processors (DSPs). The PLL controller offers flexibility and convenience by way of software-configurable multipliers and dividers to modify the input signal internally. The resulting clock outputs are passed to the TMS320C645x DSP core, peripherals, and other modules inside the TMS320C645x digital signal processors (DSPs).

SPRU974 ***TMS320C645x DSP Inter-Integrated Circuit (I2C) Module User's Guide.*** This document describes the inter-integrated circuit (I2C) module in the TMS320C645x Digital Signal Processor (DSP). The I2C provides an interface between the TMS320C645x device and other devices compliant with Philips Semiconductors Inter-IC bus (I2C-bus) specification version 2.1 and connected by way of an I2C-bus. This document assumes the reader is familiar with the I2C-bus specification.

SPRU968 ***TMS320C645x DSP 64-Bit Timer User's Guide.*** This document provides an overview of the 64-bit timer in the TMS320C645x digital signal processors (DSPs). The timer can be configured as a general-purpose 64-bit timer, dual general-purpose 32-bit timers, or a watchdog timer. When configured as a dual 32-bit timers, each half can operate in conjunction (chain mode) or independently (unchained mode) of each other.

Copyright © 2006–2012, Texas Instruments Incorporated

SPRU724 ***TMS320C645x DSP General-Purpose Input/Output (GPIO) User's Guide.*** This document describes the general-purpose input/output (GPIO) peripheral in the TMS320C645x digital signal processors (DSPs). The GPIO peripheral provides dedicated general-purpose pins that can be configured as either inputs or outputs. When configured as an input, you can detect the state of the input by reading the state of an internal register. When configured as an output, you can write to an internal register to control the state driven on the output pin.

2.8.2.3 Community Resources

The following links connect to TI community resources. Linked contents are provided "AS IS" by the respective contributors. They do not constitute TI specifications and do not necessarily reflect TI's views; see TI's Terms of Use.

TI E2E Community ***TI's Engineer-to-Engineer (E2E) Community.*** Created to foster collaboration among engineers. At e2e.ti.com, you can ask questions, share knowledge, explore ideas and help solve problems with fellow engineers.

TI Embedded Processors Wiki ***Texas Instruments Embedded Processors Wiki.*** Established to help developers get started with Embedded Processors from Texas Instruments and to foster innovation and growth of general knowledge about the hardware and software surrounding these devices.

3 Device Configuration

On the C6454 device, certain device configurations like boot mode, pin multiplexing, and endianess, are selected at device reset. The status of the peripherals (enabled/disabled) is determined after device reset. By default, the peripherals on the C6454 device are disabled and need to be enabled by software before being used.

3.1 Device Configuration at Device Reset

Table 3-1 describes the C6454 device configuration pins. The logic level of the AEA[19:0], ABA[1:0], and PCI_EN pins is latched at reset to determine the device configuration. The logic level on the device configuration pins can be set by using external pullup/pulldown resistors or by using some control device (e.g., FPGA/CPLD) to intelligently drive these pins. When using a control device, care should be taken to ensure there is no contention on the lines when the device is out of reset. The device configuration pins are sampled during reset and are driven after the reset is removed. To avoid contention, the control device should only drive the EMIFA pins when $\overline{\text{RESETSTAT}}$ is low.

NOTE

If a configuration pin must be routed out from the device and 3-stated (not driven), the internal pullup/pulldown (IPU/IPD) resistor should not be relied upon; TI recommends the use of an external pullup/pulldown resistor. For more detailed information on pullup/pulldown resistors and situations where external pullup/pulldown resistors are required, see Section 3.7, *Pullup/Pulldown Resistors*.

Table 3-1. C6454 Device Configuration Pins (AEA[19:0], ABA[1:0], and PCI_EN)

CONFIGURATION PIN	NO.	IPD/ IPU(1)	FUNCTIONAL DESCRIPTION
AEA[19:16]	[N25, L26, L25, P26]	IPD	Boot Mode Selections (BOOTMODE [3:0]). These pins select the boot mode for the device. 0000 No boot (default mode) 0001 Host boot (HPI) 0010 Reserved 0011 Reserved 0100 EMIFA 8-bit ROM boot 0101 Master I2C boot 0110 Slave I2C boot 0111 Host boot (PCI) 1000 thru 1111 Reserved If selected for boot, the corresponding peripheral is automatically enabled after device reset. For more detailed information on boot modes, see Section 2.4, *Boot Sequence*. CFGGP[2:0] pins must be set to 000b during reset for proper operation of the PCI boot mode.
AEA15	P27	IPD	EMIFA input clock source select (AECLKIN_SEL). 0 AECLKIN (default mode) 1 SYSCLK4 (CPU/x) Clock Rate. The SYSCLK4 clock rate is software selectable via the Software PLL1 Controller. By default, SYSCLK4 is selected as CPU/8 clock rate.

(1) IPD = Internal pulldown, IPU = Internal pullup. For most systems, a 1-kΩ resistor can be used to oppose the IPU/IPD. For more detailed information on pullup/pulldown resistors and situations where external pullup/pulldown resistors are required, see Section 3.7, *Pullup/Pulldown Resistors*.

Copyright © 2006–2012, Texas Instruments Incorporated

Table 3-1. C6454 Device Configuration Pins (AEA[19:0], ABA[1:0], and PCI_EN) (continued)

CONFIGURATION PIN	NO.	IPD/ IPU(1)	FUNCTIONAL DESCRIPTION
AEA14	R25	IPD	HPI peripheral bus width select (HPI_WIDTH). 0 HPI operates in HPI16 mode (default). HPI bus is 16 bits wide; HD[15:0] pins are used and the remaining HD[31:16] pins are reserved pins in the Hi-Z state. 1 HPI operates in HPI32 mode. HPI bus is 32 bits wide; HD[31:0] pins are used. Applies only when HPI function of HPI/PCI multiplexed pins is selected (PCI_EN pin = 0).
AEA13	R27	IPU	Device Endian mode (LENDIAN). 0 System operates in Big Endian mode. 1 System operates in Little Endian mode (default).
AEA12	R28	IPD	For proper C6454 device operation, this pin must be externally pulled down with a 1-kΩ resistor at device reset.
AEA11	T25	IPD	For proper C6454 device operation, this pin must be externally pulled down with a 1-kΩ resistor at device reset.
AEA[10:9]	[M25, M27]	IPD	EMAC Interface Selects (MACSEL[1:0]). These pins select the interface used by the EMAC/MDIO peripheral. 00 10/100 EMAC/MDIO with MII Interface [default] 01 10/100 EMAC/MDIO with RMII Interface 10 10/100/1000 EMAC/MDIO with GMII Interface 11 10/100/1000 EMAC/MDIO with RGMII Interface For more detailed information on the MAC_SEL[1:0] control pin selections, see .
AEA8	P25	IPD	PCI I2C EEPROM Auto-Initialization (PCI_EEAI). PCI auto-initialization via external I2C EEPROM 0 PCI auto-initialization through external I2C EEPROM is disabled. The PCI peripheral uses the specified PCI default values (default). 1 PCI auto-initialization through external I2C EEPROM is enabled. The PCI peripheral is configured through external I2C EEPROM provided the PCI peripheral pins are enabled (PCI_EN = 1). **Note:** If the PCI pin function is disabled (PCI_EN pin = 0), this pin must ***not*** be pulled up.
AEA7	N27	IPD	For proper C6454 device operation, do not oppose the IPD on this pin.
AEA6	U27	IPD	PCI Frequency Selection (PCI66). Selects the operating frequency of the PCI (either 33 MHz or 66 MHz). 0 PCI operates at 33 MHz (default) 1 PCI operates at 66 MHz **Note:** If the PCI pin function is disabled (PCI_EN pin = 0), this pin must ***not*** be pulled up.
AEA5	U28	IPD	McBSP1 pin function enable bit (MCBSP1_EN). Selects which function is enabled on the McBSP1/GPIO multiplexed pins. 0 GPIO pin function enabled (default). This means all multiplexed McBSP1/GPIO pins function as GPIO pins. 1 McBSP1 pin function enabled. This means all multiplexed McBSP1/GPIO pins function as McBSP1 pins.
AEA4	T28	IPD	SYSCLKOUT Enable bit (SYSCLKOUT_EN). Selects which function is enabled on the SYSCLK4/GP[1] muxed pin. 0 GP[1] pin function is enabled (default) 1 SYSCLK4 pin function is enabled
AEA3	T27	IPD	For proper C6454 device operation, the AEA3 pin must be pulled down to V_{SS} using a 1-kΩ resistor.
AEA[2:0]	[T26, U26, U25]	IPD	Configuration General-Purpose Inputs (CFGGP[2:0]) The value of these pins is latched to the Device Status Register following device reset and is used by the on-chip bootloader for some boot modes. For more information on the boot modes, see Section 2.4, *Boot Sequence*.

Copyright © 2006–2012, Texas Instruments Incorporated

Table 3-1. C6454 Device Configuration Pins (AEA[19:0], ABA[1:0], and PCI_EN) (continued)

CONFIGURATION PIN	NO.	IPD/ IPU(1)	FUNCTIONAL DESCRIPTION
PCI_EN	Y29	IPD	PCI pin function enable bit (PCI_EN). Selects which function is enabled on the HPI/PCI multiplexed pins. 0 HPI pin function enabled (default) This means all multiplexed HPI/PCI pins function as HPI pins. 1 PCI pin function enabled This means all multiplexed HPI/PCI pins function as PCI pins.
ABA0	V26	IPD	DDR2 Memory Controller enable (DDR2_EN). 0 DDR2 Memory Controller peripheral pins are disabled (default) 1 DDR2 Memory Controller peripheral pins are enabled
ABA1	V25	IPD	EMIFA enable (EMIFA_EN). 0 EMIFA peripheral pins are disabled (default) 1 EMIFA peripheral pins are enabled

3.2 Peripheral Configuration at Device Reset

Some C6454 device peripherals share the same pins (internally multiplexed) and are mutually exclusive. Therefore, not all peripherals may be used at the same time. The device configuration pins described in Section 3.1, *Device Configuration at Device Reset*, determine which function is enabled for the multiplexed pins.

Note that when the pin function of a peripheral is disabled at device reset, the peripheral is permanently disabled and cannot be enabled until its pin function is enabled and another device reset is executed. Also, note that enabling the pin function of a peripheral does not enable the corresponding peripheral. All peripherals on the C6454 device are disabled by default, except when used for boot, and must be enabled through software before being used.

Other peripheral options like PCI clock speed and EMAC/MDIO interface mode can also be selected at device reset through the device configuration pins. The configuration selected is also fixed at device reset and cannot be changed until another device reset is executed with a different configuration selected.

The multiply factor of the PLL1 Controller is not selected through the configuration pins. The PLL1 multiply factor is set in software through the PLL1 controller registers after device reset. The PLL2 multiply factor is fixed. For more information, see Section 7.7, *PLL1 and PLL1 Controller*, and Section 7.8, *PLL2 and PLL2 Controller*.

On the C6454 device, the PCI peripheral pins are multiplexed with the HPI pins. The PCI_EN pin selects the function for the HPI/PCI multiplexed pins. The PCI66, PCI_EEAI, and HPI_WIDTH control other functions of the PCI and HPI peripherals. Table 3-2 describes the effect of the PCI_EN, PCI66, PCI_EEAI, and HPI_WIDTH configuration pins.

Table 3-2. PCI_EN, PCI66, PCI_EEAI, and HPI_WIDTH Peripheral Selection (HPI and PCI)

CONFIGURATION PIN SETTING(1)				PERIPHERAL FUNCTION SELECTED			
PCI_EN PIN [Y29]	PCI66 AEA6 PIN [U27]	PCI_EEAI AEA8 PIN [P25](1)	HPI_WIDTH AEA14 PIN [R25]	HPI DATA LOWER	HPI DATA UPPER	32-BIT PCI (66-/33-MHz)	PCI AUTO-INIT
0	0	0	0	Enabled	Hi-Z	Disabled	N/A
0	0	0	1	Enabled	Enabled	Disabled	N/A
1	1	1	X	Disabled		Enabled (66 MHz)	Enabled (via External I2C EEPROM)
1	1	0	X	Disabled			Disabled

(1) PCI_EEAI is latched at reset as a configuration input. If PCI_EEAI is set as one, then default values are loaded from an external I2C EEPROM.

Copyright © 2006–2012, Texas Instruments Incorporated

Table 3-2. PCI_EN, PCI66, PCI_EEAI, and HPI_WIDTH Peripheral Selection (HPI and PCI) (continued)

CONFIGURATION PIN SETTING[1]				PERIPHERAL FUNCTION SELECTED			
PCI_EN PIN [Y29]	PCI66 AEA6 PIN [U27]	PCI_EEAI AEA8 PIN [P25][1]	HPI_WIDTH AEA14 PIN [R25]	HPI DATA LOWER	HPI DATA UPPER	32-BIT PCI (66-/33-MHz)	PCI AUTO-INIT
1	0	0	X	Disabled		Enabled (33 MHz)	Disabled (default values)
1	0	1	X	Disabled			Enabled (via External I2C EEPROM)

The MAC_SEL[1:0] configuration pins (AEA[10:9) control which interface is used by the EMAC/MDIO. Table 3-3 describes the effect of the MACSEL[1:0] configuration pins.

Table 3-3. MAC_SEL[1:0] Peripheral Selection (EMAC)

MAC_SEL[1:0]/ AEA[10:9] PINS [M25, M27] CONFIGURATION PIN SETTING	EMAC/MDIO PERIPHERAL FUNCTION SELECTED
00b	10/100 EMAC/MDIO with MII Interface [default]
01b	10/100 EMAC/MDIO with RMII Interface
10b	10/100/1000 EMAC/MDIO with GMII Interface
11b	10/100/1000 EMAC/MDIO with RGMII Interface[1]

(1) RGMII interface requires a 1.5-/1.8-V I/O supply.

3.3 Peripheral Selection After Device Reset

On the C6454 device, peripherals can be in one of several states. These states are listed in Table 3-4.

Table 3-4. Peripheral States

STATE	DESCRIPTION	PERIPHERALS THAT CAN BE IN THIS STATE
Static powerdown	Peripheral pin function has been completely disabled through the device configuration pins. Peripheral is held in reset and clock is turned off.	HPI PCI McBSP1 EMAC/MDIO EMIFA DDR2 Memory Controller
Disabled	Peripheral is held in reset and clock is turned off. Default state for all peripherals not in static powerdown mode.	I2C Timer 0 Timer 1 GPIO EMAC/MDIO McBSP0 McBSP1 HPI PCI
Enabled	Clock to the peripheral is turned on and the peripheral is taken out of reset.	I2C Timer 0 Timer 1 GPIO MDIO EMAC/MDIO McBSP0 McBSP1 HPI PCI EMIFA DDR2 Memory Controller

Copyright © 2006–2012, Texas Instruments Incorporated

Table 3-4. Peripheral States (continued)

STATE	DESCRIPTION	PERIPHERALS THAT CAN BE IN THIS STATE
Enable in progress	Not a user-programmable state. This is an intermediate state when transitioning from an disabled state to an enabled state.	All peripherals that can be in an enabled state.

Following device reset, all peripherals that are not in the static powerdown state are in the disabled state by default. Peripherals used for boot such as HPI and PCI are enabled automatically following a device reset.

Peripherals are only allowed certain transitions between states (see Figure 3-1).

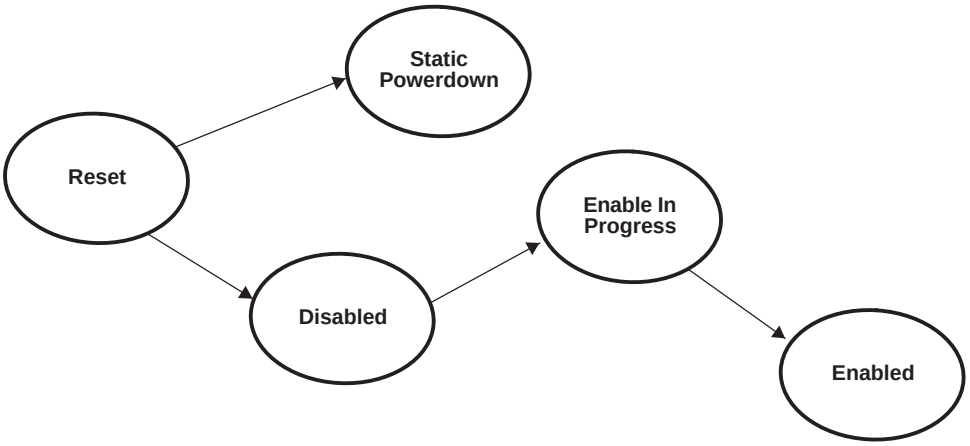

Figure 3-1. Peripheral Transitions Between States

Figure 3-2 shows the flow needed to change the state of a given peripheral on the C6454 device.

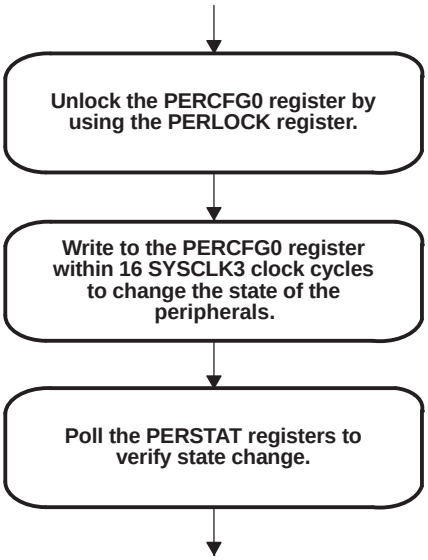

Figure 3-2. Peripheral State Change Flow

A 32-bit key (value = 0x0F0A 0B00) must be written to the Peripheral Lock register (PERLOCK) in order to allow access to the PERCFG0 register. Writes to the PERCFG1 register can be done directly without going through the PERLOCK register.

Copyright © 2006–2012, Texas Instruments Incorporated

NOTE

The instructions that write to the PERLOCK and PERCFG0 registers must be in the same fetch packet if code is being executed from external memory. If the instructions are in different fetch packets, fetching the second instruction from external memory may stall the instruction long enough such that PERCFG0 register will be locked before the instruction is executed.

3.4 Device State Control Registers

The C6454 device has a set of registers that are used to control the status of its peripherals. These registers are shown in Table 3-5 and described in the next sections.

NOTE

The device state control registers can only be accessed using the CPU or the emulator.

Table 3-5. Device State Control Registers

HEX ADDRESS RANGE	ACRONYM	REGISTER NAME
02AC 0000	-	Reserved
02AC 0004	PERLOCK	Peripheral Lock Register
02AC 0008	PERCFG0	Peripheral Configuration Register 0
02AC 000C	-	Reserved
02AC 0010	-	Reserved
02AC 0014	PERSTAT0	Peripheral Status Register 0
02AC 0018	PERSTAT1	Peripheral Status Register 1
02AC 001C - 02AC 001F	-	Reserved
02AC 0020	EMACCFG	EMAC Configuration Register
02AC 0024 - 02AC 002B	-	Reserved
02AC 002C	PERCFG1	Peripheral Configuration Register 1
02AC 0030 - 02AC 0053	-	Reserved
02AC 0054	EMUBUFPD	Emulator Buffer Powerdown Register
02AC 0058	-	Reserved

Copyright © 2006–2012, Texas Instruments Incorporated

3.4.1 Peripheral Lock Register Description

When written with correct 32-bit key (0x0F0A0B00), the Peripheral Lock Register (PERLOCK) allows one write to the PERCFG0 register within 16 SYSCLK3 cycles.

NOTE

The instructions that write to the PERLOCK and PERCFG0 registers must be in the same fetch packet if code is being executed from external memory. If the instructions are in different fetch packets, fetching the second instruction from external memory may stall the instruction long enough such that PERCFG0 register will be locked before the instruction is executed.

31	0
LOCKVAL	
R/W-F0F0 F0F0	

LEGEND: R/W = Read/Write; -*n* = value after reset

Figure 3-3. Peripheral Lock Register (PERLOCK) - 0x02AC 0004

Table 3-6. Peripheral Lock Register (PERLOCK) Field Descriptions

Bit	Field	Value	Description
31:0	LOCKVAL		When programmed with 0x0F0A 0B00 allows one write to the PERCFG0 register within 16 SYSCLK3 clock cycles.

Copyright © 2006–2012, Texas Instruments Incorporated

3.4.2 Peripheral Configuration Register 0 Description

The Peripheral Configuration Register (PERCFG0) is used to change the state of the peripherals. One write is allowed to this register within 16 SYSCLK3 cycles after the correct key is written to the PERLOCK register.

NOTE

The instructions that write to the PERLOCK and PERCFG0 registers must be in the same fetch packet if code is being executed from external memory. If the instructions are in different fetch packets, fetching the second instruction from external memory may stall the instruction long enough that the PERCFG0 register is locked before the instruction is executed.

31							24
Reserved							
R/W-0							

23		21	20	19	18	17	16
Reserved			PCICTL	Reserved	HPICTL	Reserved	McBSP1CTL
R/W-0			R/W-0	R/W-0	R/W-0	R/W-0	R/W-0

15	14	13	12	11	10	9	8
Reserved	McBSP0CTL	Reserved	I2CCTL	Reserved	GPIOCTL	Reserved	TIMER1CTL
R/W-0	R/W-0	R/W-0	R/W-0	R/W-0	R/W-0	R/W-0	R/W-0

7	6	5	4	3			0
Reserved	TIMER0CTL	Reserved	EMACCTL	Reserved			
R/W-0	R/W-0	R/W-0	R/W-0	R/W-0			

LEGEND: R/W = Read/Write; -*n* = value after reset

Figure 3-4. Peripheral Configuration Register 0 (PERCFG0) - 0x02AC 0008

Table 3-7. Peripheral Configuration Register 0 (PERCFG0) Field Descriptions

Bit	Field	Value	Description
31:21	Reserved		Reserved.
20	PCICTL		Mode control for PCI. This bit defaults to 1 when host boot is used (BOOTMODE[3:0] = 0111b).
		0	Set PCI to disabled mode
		1	Set PCI to enabled mode
19	Reserved		Reserved.
18	HPICTL		Mode control for HPI. This bit defaults to 1 when host boot is used (BOOTMODE[3:0] = 0001b).
		0	Set HPI to disabled mode
		1	Set HPI to enabled mode
17	Reserved	1	Reserved.
16	McBSP1CTL		Mode control for McBSP1
		0	Set McBSP1 to disabled mode
		1	Set McBSP1 to enabled mode
15	Reserved		Reserved.
14	McBSP0CTL		Mode control for McBSP0
		0	Set McBSP0 to disabled mode
		1	Set McBSP0 to enabled mode
13	Reserved		Reserved.

Table 3-7. Peripheral Configuration Register 0 (PERCFG0) Field Descriptions (continued)

Bit	Field	Value	Description
12	I2CCTL		Mode control for I2C
		0	Set I2C to disabled mode
		1	Set I2C to enabled mode
11	Reserved		Reserved.
10	GPIOCTL		Mode control for GPIO
		0	Set GPIO to disabled mode
		1	Set GPIO to enabled mode
9	Reserved		Reserved.
8	TIMER1CTL		Mode control for Timer 1
		0	Set Timer 1 to disabled mode
		1	Set Timer 1 to enabled mode
7	Reserved		Reserved.
6	TIMER0CTL		Mode control for Timer 0
		0	Set Timer 0 to disabled mode
		1	Set Timer 0 to enabled mode
5	Reserved		Reserved.
4	EMACCTL		Mode control for EMAC/MDIO
		0	Set EMAC/MDIO to disabled mode
		1	Set EMAC/MDIO to enabled mode
3:0	Reserved		Reserved.

3.4.3 Peripheral Configuration Register 1 Description

The Peripheral Configuration Register (PERCFG1) is used to enable the EMIFA and DDR2 Memory Controller. EMIFA and the DDR2 Memory Controller do not have corresponding status bits in the Peripheral Status Registers. The EMIFA and DDR2 Memory Controller peripherals can be used within 16 SYSCLK3 cycles after EMIFACTL and DDR2CTL are set to 1. Once EMIFACTL and DDR2CTL are set to 1, they cannot be set to 0. Note that if the DDR2 Memory Controller and EMIFA are disabled at reset through the device configuration pins (DDR2.EN[ABA0] and EMIFA[ABA1]), they cannot be enabled through the PERCFG1 register.

31 – 8	7 – 2	1	0
Reserved	Reserved	DDR2CTL	EMIFACTL
R-0x00	R-0x00	R/W-0	R/W-0

LEGEND: R/W = Read/Write; R = Read only; -*n* = value after reset

Figure 3-5. Peripheral Configuration Register 1 (PERCFG1) - 0x02AC 002C

Table 3-8. Peripheral Configuration Register 1 (PERCFG1) Field Descriptions

Bit	Field	Value	Description
31:2	Reserved		Reserved.
1	DDR2CTL		Mode Control for DDR2 Memory Controller. Once this bit is set to 1, it cannot be changed to 0.
		0	Set DDR2 to disabled
		1	Set DDR2 to enabled

Copyright © 2006–2012, Texas Instruments Incorporated

Table 3-8. Peripheral Configuration Register 1 (PERCFG1) Field Descriptions (continued)

Bit	Field	Value	Description
0	EMIFACTL		Mode control for EMIFA. Once this bit is set to 1, it cannot be changed to 0. This bit defaults to 1 if EMIFA 8-bit ROM boot is used (BOOTMODE[3:0] = 0100b).
		0	Set EMIFA to disabled
		1	Set EMIFA to enabled

3.4.4 Peripheral Status Registers Description

The Peripheral Status Registers (PERSTAT0 and PERSTAT1) show the status of the C6454 device peripherals.

31–30	29–27	26–24
Reserved	HPISTAT	McBSP1STAT
R-0	R-0	R-0

23–21	20–18	17–16
McBSP0STAT	I2CSTAT	GPIOSTAT
R-0	R-0	R-0

15	14–12	11–9	8
GPIOSTAT	TIMER1STAT	TIMER0STAT	EMACSTAT
R-0	R-0	R-0	R-0

7–6	5–0
EMACSTAT	Reserved
R-0	R-0

LEGEND: R = Read only; -*n* = value after reset

Figure 3-6. Peripheral Status Register 0 (PERSTAT0) - 0x02AC 0014

Table 3-9. Peripheral Status Register 0 (PERSTAT0) Field Descriptions

Bit	Field	Value	Description
31:30	Reserved		Reserved.
29:27	HPISTAT		HPI status
		000	HPI is in the disabled state
		001	HPI is in the enabled state
		011	HPI is in the static powerdown state
		100	HPI is in the disable in progress state
		101	HPI is in the enable in progress state
		Others	Reserved
26:24	McBSP1STAT		McBSP1 status
		000	McBSP1 is in the disabled state
		001	McBSP1 is in the enabled state
		011	McBSP1 is in the static powerdown state
		100	McBSP1 is in the disable in progress state
		101	McBSP1 is in the enable in progress state
		Others	Reserved
23:21	McBSP0STAT		McBSP0 status
		000	McBSP0 is in the disabled state
		001	McBSP0 is in the enabled state
		011	McBSP0 is in the static powerdown state
		100	McBSP0 is in the disable in progress state
		101	McBSP0 is in the enable in progress state
		Others	Reserved

Copyright © 2006–2012, Texas Instruments Incorporated

Table 3-9. Peripheral Status Register 0 (PERSTAT0) Field Descriptions (continued)

Bit	Field	Value	Description
20:18	I2CSTAT		I2C status
		000	I2C is in the disabled state
		001	I2C is in the enabled state
		011	I2C is in the static powerdown state
		100	I2C is in the disable in progress state
		101	I2C is in the enable in progress state
		Others	Reserved
17:15	GPIOSTAT		GPIO status
		000	GPIO is in the disabled state
		001	GPIO is in the enabled state
		011	GPIO is in the static powerdown state
		100	GPIO is in the disable in progress state
		101	GPIO is in the enable in progress state
		Others	Reserved
14:12	TIMER1STAT		Timer1 status
		000	Timer1 is in the disabled state
		001	Timer1 is in the enabled state
		011	Timer1 is in the static powerdown state
		100	Timer1 is in the disable in progress state
		101	Timer1 is in the enable in progress state
		Others	Reserved
11:9	TIMER0STAT		Timer0 status
		000	Timer0 is in the disabled state
		001	Timer0 is in the enabled state
		011	Timer0 is in the static powerdown state
		100	Timer0 is in the disable in progress state
		101	Timer0 is in the enable in progress state
		Others	Reserved
8:6	EMACSTAT		EMAC/MDIO status
		000	EMAC/MDIO is in the disabled state
		001	EMAC/MDIO is in the enabled state
		011	EMAC/MDIO is in the static powerdown state
		100	EMAC/MDIO is in the disable in progress state
		101	EMAC/MDIO is in the enable in progress state
		Others	Reserved
5:0	Reserved		Reserved

31 – 16	15 – 5	3	2 – 0
Reserved	Reserved		PCISTAT
R-0	R-0		R-0

LEGEND: R = Read only; -*n* = value after reset

Figure 3-7. Peripheral Status Register 1 (PERSTAT1) - 0x02AC 0018

Table 3-10. Peripheral Status Register 1 (PERSTAT1) Field Descriptions

Bit	Field	Value	Description
31:3	Reserved		Reserved
2:0	PCISTAT		PCI status
		000	PCI is in the disabled state
		001	PCI is in the enabled state
		011	PCI is in the static powerdown state
		101	PCI is in the enable in progress state
		Others	Reserved

Copyright © 2006–2012, Texas Instruments Incorporated

3.4.5 EMAC Configuration Register (EMACCFG) Description

The EMAC Configuration Register (EMACCFG) is used to assert and deassert the reset of the Reduced Media Independent Interface (RMII) logic of the EMAC. For more details on how to use this register, see Section 7.14, *Ethernet MAC (EMAC)*.

31–24	23–19	18	17–16
Reserved	Reserved	RMII_RST	Reserved
R/W-0	R/W-0001b	R/W-1	R/W-0

15–0
Reserved
R/W-0

LEGEND: R/W = Read/Write; R = Read only; -*n* = value after reset

Figure 3-8. EMAC Configuration Register (EMACCFG) - 0x02AC 0020

Table 3-11. EMAC Configuration Register (EMACCFG) Field Descriptions

Bit	Field	Value	Description
31:19	Reserved		Reserved. Writes to this register must keep the default values of these bits.
18	RMII_RST		RMII reset bit. This bit is used to reset the RMII logic of the EMAC.
		0	RMII logic reset is released.
		1	RMII logic reset is asserted.
17:0	Reserved		Reserved. Writes to this register must keep this bit as 0.

3.4.6 Emulator Buffer Powerdown Register (EMUBUFPD) Description

The Emulator Buffer Powerdown Register (EMUBUFPD) is used to control the state of the pin buffers of emulator pins EMU[18:2]. These buffers can be powered down if the device trace feature is not needed.

31 – 8	7 – 1	0
Reserved	Reserved	EMUCTL
R-0	R-0	R/W-0

LEGEND: R/W = Read/Write; R = Read only; -*n* = value after reset

Figure 3-9. Emulator Buffer Powerdown Register (EMUBUFPD) - 0x02AC 0054

Table 3-12. Emulator Buffer Powerdown Register (EMUBUFPD) Field Descriptions

Bit	Field	Value	Description
31:1	Reserved		Reserved
0	EMUCTL		Buffer powerdown for EMU[18:2] pins
		0	Power-up buffers
		1	Power-down buffers

Copyright © 2006–2012, Texas Instruments Incorporated

3.5 Device Status Register Description

The device status register depicts the device configuration selected upon device reset. Once set, these bits will remain set until a device reset. For the actual register bit names and their associated bit field descriptions, see Figure 3-10 and Table 3-13.

Note that enabling or disabling peripherals through the Peripheral Configuration Registers (PERCFG0 and PERCFG1) does not affect the DEVSTAT register. To determine the status of peripherals following writes to the PERCFG0 and PERCFG1 registers, read the Peripherals Status Registers (PERSTAT0 and PERSTAT1).

31							24
Reserved							
R-0000 0000							
23	22	21	20	19	18	17	16
Reserved	EMIFA_EN	DDR2_EN	PCI_EN	CFGGP2	CFGGP1	CFGGP0	Reserved
R-0	R-0	R-0	R-0	R-0	R-0	R-0	R-1
15	14	13	12	11	10	9	8
SYSCLKOUT_EN	MCBSP1_EN	PCI66	Reserved	PCI_EEAI	MAC_SEL1	MAC_SEL0	Reserved
R-0	R-0	R-0	R-0	R-0	R-0	R-0	R-1
7	6	5	4	3	2	1	0
Reserved	LENDIAN	HPI_WIDTH	AECLKINSEL	BOOTMODE3	BOOTMODE2	BOOTMODE1	BOOTMODE0
R-0	R-1	R-0	R-0	R-0	R-0	R-0	R-0

LEGEND: R/W = Read/Write; R = Read only; -*x* = value after reset

Note: The default values of the fields in the DEVSTAT register are latched from device configuration pins, as described in Section 3.1, *Device Configuration at Device Reset*. The default values shown here correspond to the setting dictated by the internal pullup or pulldown resistor.

Figure 3-10. Device Status Register (DEVSTAT) - 0x02A8 0000

Table 3-13. Device Status Register (DEVSTAT) Field Descriptions

Bit	Field	Value	Description
31:23	Reserved		Reserved. Read-only, writes have no effect.
22	EMIFA_EN		EMIFA Enable (EMIFA_EN) status bit Shows the status of whether the EMIFA peripheral pins are enabled/disabled.
		0	EMIFA peripheral pins are disabled (default)
		1	EMIFA peripheral pins are enabled
21	DDR2_EN		DDR2 Memory Controller Enable (DDR2_EN) status bit Shows the status of whether the DDR2 Memory Controller peripheral pins are enabled/disabled.
		0	DDR2 Memory Controller peripheral pins are disabled (default)
		1	DDR2 Memory Controller peripheral pins are enabled
20	PCI_EN		PCI Enable (PCI_EN) status bit Shows the status of which function is enabled on the HPI/PCI multiplexed pins.
		0	HPI pin functions are enabled (default)
		1	PCI pin functions are enabled
19:17	CFGGP[2:0]		Used as General-Purpose inputs for configuration purposes. These pins are latched at reset. These values can be used by S/W routines for boot operations.
16	Reserved		Reserved. Read-only, writes have no effect.
15	SYSCLKOUT_EN		SYSCLKOUT Enable (SYSCLKOUT_EN) status bit Shows the status of which function is enabled on the SYSCLK4/GP[1] muxed pin.
		0	GP[1] pin function of the SYSCLK4/GP[1] pin enabled (default)
		1	SYSCLK4 pin function of the SYSCLK4/GP[1] pin enabled

Table 3-13. Device Status Register (DEVSTAT) Field Descriptions (continued)

Bit	Field	Value	Description
14	MCBSP1_EN		McBSP1 Enable (MCBSP1_EN) status bit Shows the status of which function is enabled on the McBSP1/GPIO muxed pins.
		0	GPIO pin functions enabled (default)
		1	McBSP1 pin functions enabled
13	PCI66		PCI Frequency Selection (PCI66) status bit Shows the PCI operating frequency selected at reset.
		0	PCI operates at 33 MHz (default)
		1	PCI operates at 66 MHz
11	PCI_EEAI		PCI I2C EEPROM Auto-Initialization (PCI_EEAI) status bit Shows whether the PCI auto-initialization via external I2C EEPROM is enabled/disabled.
		0	PCI auto-initialization through external I2C EEPROM is disabled; the PCI peripheral uses the specified PCI default values (default).
		1	PCI auto-initialization through external I2C EEPROM is enabled; the PCI peripheral is configured through external I2C EEPROM provided the PCI peripheral pin is enabled (PCI_EN = 1).
10:9	MACSEL[1:0]		EMAC Interface Select (MACSEL[1:0]) status bits Shows which EMAC interface mode has been selected.
		00	10/100 EMAC/MDIO with MII Interface (default)
		01	10/100 EMAC/MDIO with RMII Interface
		10	10/100/1000 EMAC/MDIO with GMII Interface
		11	10/100/1000 EMAC/MDIO with RGMII Mode Interface [RGMII interface requires a 1.8-V or 1.5-V I/O supply]
8:7	Reserved		Reserved. Read-only, writes have no effect.
6	LENDIAN		Device Endian mode (LENDIAN) Shows the status of whether the system is operating in Big Endian mode or Little Endian mode (default).
		0	System is operating in Big Endian mode
		1	System is operating in Little Endian mode (default)
5	HPI_WIDTH		HPI bus width control bit. Shows the status of whether the HPI bus operates in 32-bit mode or in 16-bit mode (default).
		0	HPI operates in 16-bit mode. (default)
		1	HPI operates in 32-bit mode
4	AECLKINSEL		EMIFA input clock select Shows the status of what clock mode is enabled or disabled for EMIFA.
		0	AECLKIN (default mode)
		1	SYSCLK4 (CPU/x) Clock Rate. The SYSCLK4 clock rate is software selectable via the PLL1 Controller. By default, SYSCLK4 is selected as CPU/8 clock rate.
3:0	BOOTMODE[3:0]		Boot mode configuration bits Shows the status of what device boot mode configuration is operational. BOOTMODE[3:0] [**Note:** if selected for boot, the corresponding peripheral is automatically enabled after device reset.]
		0000	No boot (default mode)
		0001	Host boot (HPI)
		0010	Reserved
		0011	Reserved
		0100	EMIFA 8-bit ROM boot
		0101	Master I2C boot
		0110	Slave I2C boot
		0111	Host boot (PCI)
		1000 thru 1111	Reserved
			For more detailed information on the boot modes, see Section 2.4, *Boot Sequence*.

Copyright © 2006–2012, Texas Instruments Incorporated

3.6 JTAG ID (JTAGID) Register Description

The JTAG ID register is a read-only register that identifies to the customer the JTAG/Device ID. For the C6454 device, the JTAG ID register resides at address location 0x02A8 0008. For the actual register bit names and their associated bit field descriptions, see Figure 3-11 and Table 3-14.

31–28	27–12	11–1	0
VARIANT (4-bit)	PART NUMBER (16-bit)	MANUFACTURER (11-bit)	LSB
R-n	R-0000 0000 1000 1010b	0000 0010 111b	R-1

LEGEND: R = Read only; -*n* = value after reset

Figure 3-11. JTAG ID (JTAGID) Register - 0x02A8 0008

Table 3-14. JTAG ID (JTAGID) Register Field Descriptions

Bit	Field	Value	Description
31:28	VARIANT		Variant (4-Bit) value. The value of this field depends on the silicon revision being used. For more information, see the *TMS320C6455/54 Digital Signal Processor Silicon Errata* (literature number SPRZ234). **Note:** the VARIANT field may be invalid if no CLKIN1 signal is applied.
27:12	PART NUMBER		Part Number (16-Bit) value. C6454 device value: 0000 0000 1000 1010b.
11:1	MANUFACTURER		Manufacturer (11-Bit) value. C6454 device value: 0000 0010 111b.
0	LSB		LSB. This bit is read as a "1" for the C6454 device.

3.7 Pullup/Pulldown Resistors

Proper board design should ensure that input pins to the C6454 device always be at a valid logic level and not floating. This may be achieved via pullup/pulldown resistors. The C6454 device features internal pullup (IPU) and internal pulldown (IPD) resistors on most pins to eliminate the need, unless otherwise noted, for external pullup/pulldown resistors.

An external pullup/pulldown resistor needs to be used in the following situations:

- *Device Configuration Pins*: If the pin is both routed out and 3-stated (not driven), an external pullup/pulldown resistor ***must*** be used, even if the IPU/IPD matches the desired value/state.
- *Other Input Pins*: If the IPU/IPD does not match the desired value/state, use an external pullup/pulldown resistor to pull the signal to the opposite rail.

For the device configuration pins (listed in Table 3-1), if they are both routed out and 3-stated (not driven), it is ***strongly*** recommended that an external pullup/pulldown resistor be implemented. Although, internal pullup/pulldown resistors exist on these pins and they may match the desired configuration value, providing external connectivity can help ensure that valid logic levels are latched on these device configuration pins. In addition, applying external pullup/pulldown resistors on the device configuration pins adds convenience to the user in debugging and flexibility in switching operating modes.

Tips for choosing an external pullup/pulldown resistor:

- Consider the total amount of current that may pass through the pullup or pulldown resistor. Make sure to include the leakage currents of all the devices connected to the net, as well as any internal pullup or pulldown resistors.
- Decide a target value for the net. For a pulldown resistor, this should be below the lowest V_{IL} level of all inputs connected to the net. For a pullup resistor, this should be above the highest V_{IH} level of all inputs on the net. A reasonable choice would be to target the V_{OL} or V_{OH} levels for the logic family of the limiting device; which, by definition, have margin to the V_{IL} and V_{IH} levels.
- Select a pullup/pulldown resistor with the largest possible value; but, which can still ensure that the net will reach the target pulled value when maximum current from all devices on the net is flowing through the resistor. The current to be considered includes leakage current plus, any other internal and external pullup/pulldown resistors on the net.
- For bidirectional nets, there is an additional consideration which sets a lower limit on the resistance value of the external resistor. Verify that the resistance is small enough that the weakest output buffer can drive the net to the opposite logic level (including margin).
- Remember to include tolerances when selecting the resistor value.
- For pullup resistors, also remember to include tolerances on the DV_{DD} rail.

For most systems, a 1-kΩ resistor can be used to oppose the IPU/IPD while meeting the above criteria. Users should confirm this resistor value is correct for their specific application.

For most systems, a 20-kΩ resistor can be used to compliment the IPU/IPD on the device configuration pins while meeting the above criteria. Users should confirm this resistor value is correct for their specific application.

For more detailed information on input current (I_I), and the low-/high-level input voltages (V_{IL} and V_{IH}) for the C6454 device, see Section 6.3, *Electrical Characteristics Over Recommended Ranges of Supply Voltage and Operating Case Temperature*.

To determine which pins on the C6454 device include internal pullup/pulldown resistors, see Table 2-3, *Terminal Functions*.

3.8 Configuration Examples

Figure 3-12 and Figure 3-13 illustrate examples of peripheral selections/options that are configurable on the C6454 device.

Copyright © 2006–2012, Texas Instruments Incorporated

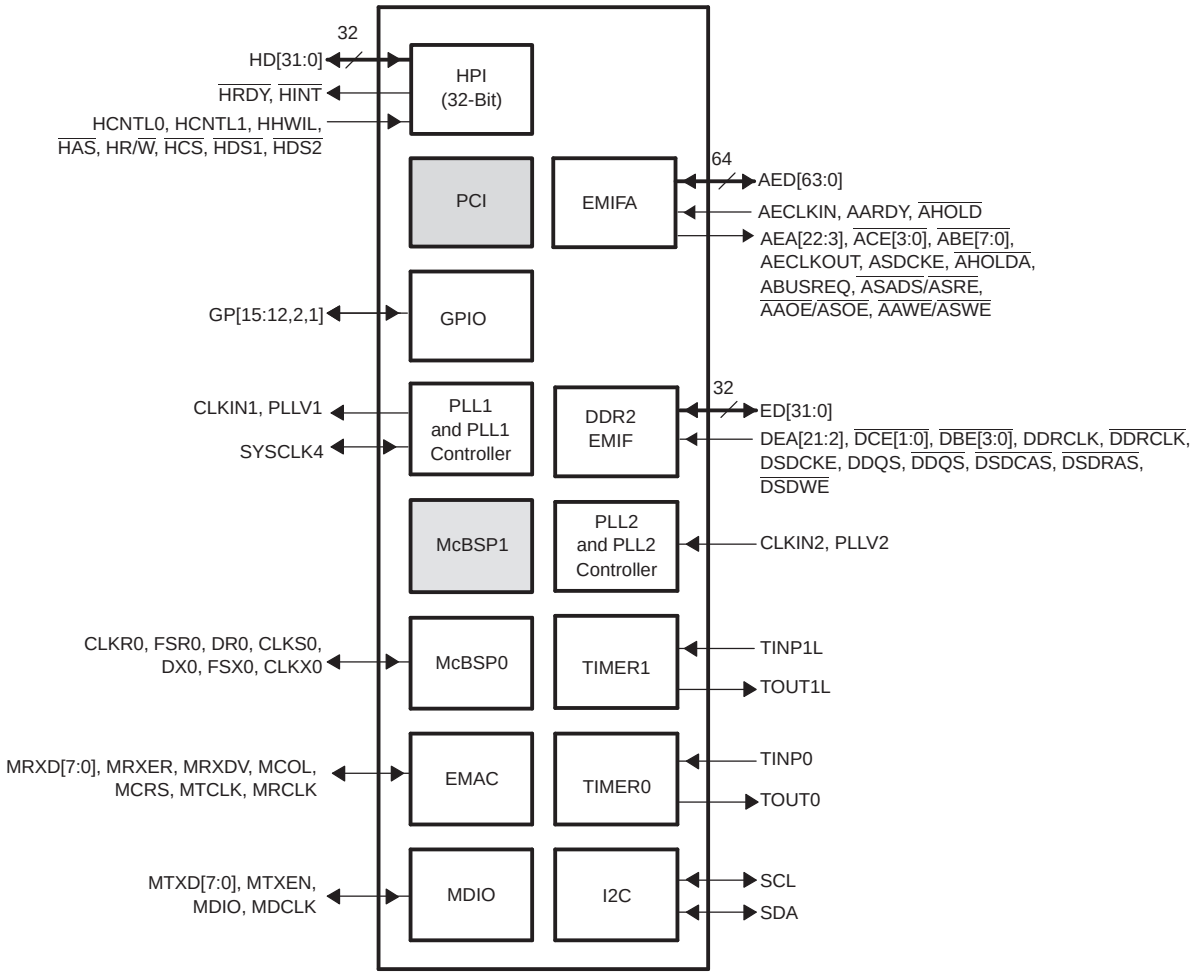

DEVSTAT Register: 0x0061 8161

PCI_EN = 0 (PCI disabled, default)
ABA1 (EMIFA_EN) = 1(EMIFA enabled)
ABA0 (DDR2_EN) = 1 (DDR2 Memory Controller enabled)

AEA[19:16] (BOOTMODE[3:0]) = 0001, (HPI Boot)
AEA[15] (AECLKIN_SEL) = 0, (AECLKIN, default)
AEA[14] (HPI_WIDTH) = 1, (HPI, 32-bit Operation)
AEA[13] (LENDIAN) = IPU, (Little Endian Mode, default)
AEA[12] = 0, (do not oppose IPD)
AEA[11] = 0, (do not oppose IPD)
AEA[10:9] (MACSEL[1:0]) = 00, (10/100 MII Mode)
AEA[8] (PCI_EEAI) = 0, (PCI I2C EEPROM Auto-Init disabled, default)
AEA[7] = 0, (do not oppose IPD)
AEA[6] (PCI66) = 0, (PCI 33 MHz [default, don't care])
AEA[5] (MCBSP1_EN) = 0, (McBSP1 disabled, default)
AEA[4] (SYSCLKOUT_EN) = 1, (SYSCLK4 pin function)
AEA[3] = 0, (do not oppose IPD)
AEA[2:0] (CFGGP[2:0]) = 000, (default)

Figure 3-12. Configuration Example A (McBSP + HPI32 + I2C + EMIFA + DDR2 Memory Controller + TIMERS + EMAC (MII) + MDIO)

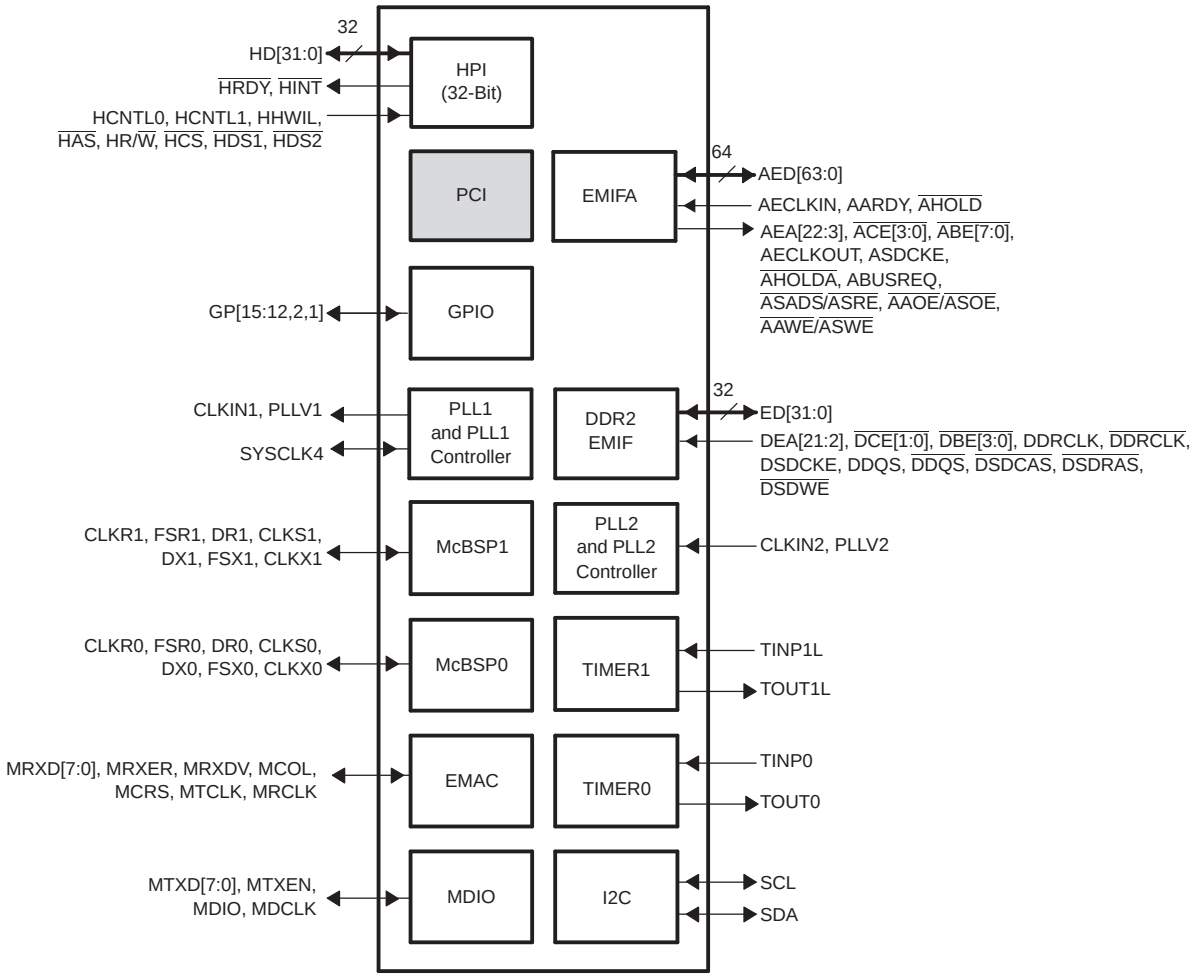

Shading denotes a peripheral module not available for this configuration.

DEVSTAT Register: 0x0061 C161

PCI_EN = 0 (PCI disabled, default)
ABA1 (EMIFA_EN) = 1(EMIFA enabled)
ABA0 (DDR2_EN) = 1 (DDR2 Memory Controller enabled)

AEA[19:16] (BOOTMODE[3:0]) = 0001, (HPI Boot)
AEA[15] (AECLKIN_SEL) = 0, (AECLKIN, default)
AEA[14] (HPI_WIDTH) = 1, (HPI, 32-bit Operation)
AEA[13] (LENDIAN) = IPU, (Little Endian Mode, default)
AEA[12] = 0, (do not oppose IPD)
AEA[11] = 0, (do not oppose IPD)
AEA[10:9] (MACSEL[1:0]) = 00, (10/100 MII Mode)

AEA[8] (PCI_EEAI) = 0, (PCI I2C EEPROM Auto-Init disabled, default)
AEA[7] = 0, (do not oppose IPD)
AEA[6] (PCI66) = 0, (PCI 33 MHz [default, don't care])
AEA[5] (MCBSP1_EN) = 1, (McBSP1 enabled)
AEA[4] (SYSCLKOUT_EN) = 1, (SYSCLK4 pin function)
AEA[3] = 0, (do not oppose IPD)
AEA[2:0] (CFGGP[2:0]) = 000, (default)

Figure 3-13. Configuration Example B (2 McBSPs + HPI32 + I2C + EMIFA + DDR2 Memory Controller + TIMERS + EMAC (GMII) + MDIO

Copyright © 2006–2012, Texas Instruments Incorporated

4 System Interconnect

On the C6454 device, the C64x+ Megamodule, the EDMA3 transfer controllers, and the system peripherals are interconnected through two switch fabrics. The switch fabrics allow for low-latency, concurrent data transfers between master peripherals and slave peripherals. The switch fabrics also allow for seamless arbitration between the system masters when accessing system slaves.

4.1 Internal Buses, Bridges, and Switch Fabrics

Two types of buses exist in the C6454 device: data buses and configuration buses. Some C6454 device peripherals have both a data bus and a configuration bus interface, while others only have one type of interface. Furthermore, the bus interface width and speed varies from peripheral to peripheral.

Configuration buses are mainly used to access the register space of a peripheral and the data buses are used mainly for data transfers. However, in some cases, the configuration bus is also used to transfer data. For example, data is transferred to the McBSP via its configuration bus. Similarly, the data bus can also be used to access the register space of a peripheral. For example, the EMIFA and DDR2 memory controller registers are accessed through their data bus interface.

The C64x+ Megamodule, the EDMA3 traffic controllers, and the various system peripherals can be classified into two categories: masters and slaves. Masters are capable of initiating read and write transfers in the system and do not rely on the EDMA3 for their data transfers. Slaves on the other hand rely on the EDMA3 to perform transfers to and from them. Masters include the EDMA3 traffic controllers and PCI. Slaves include the McBSP and I2C.

The C6454 device contains two switch fabrics through which masters and slaves communicate. The data switch fabric, known as the data switched central resource (SCR), is a high-throughput interconnect mainly used to move data across the system (for more information, see Section 4.2). The data SCR connects masters to slaves via 128-bit data buses running at a SYSCLK2 frequency (SYSCLK2 is generated from PLL1 controller). Peripherals that have a 128-bit data bus interface running at this speed can connect directly to the data SCR; other peripherals require a bridge.

The configuration switch fabric, also known as the configuration switch central resource (SCR) is mainly used by the C64x+ Megamodule to access peripheral registers (for more information, see Section 4.3). The configuration SCR connects C64x+ Megamodule to slaves via 32-bit configuration buses running at a SYSCLK2 frequency (SYSCLK2 is generated from PLL1 controller). As with the data SCR, some peripherals require the use of a bridge to interface to the configuration SCR. Note that the data SCR also connects to the configuration SCR.

Bridges perform a variety of functions:

- Conversion between configuration bus and data bus.
- Width conversion between peripheral bus width and SCR bus width.
- Frequency conversion between peripheral bus frequency and SCR bus frequency.

For example, the EMIFA and DDR2 memory controller require a bridge to convert their 64-bit data bus interface into a 128-bit interface so that they can connect to the data SCR.

Note that some peripherals can be accessed through the data SCR and also through the configuration SCR.

Copyright © 2006–2012, Texas Instruments Incorporated

4.2 Data Switch Fabric Connections

Figure 4-1 shows the connection between slaves and masters through the data switched central resource (SCR). Masters are shown on the right and slaves on the left. The data SCR connects masters to slaves via 128-bit data buses running at a SYSCLK2 frequency. SYSCLK2 is supplied by the PLL1 controller and is fixed at a frequency equal to the CPU frequency divided by 3.

Some peripherals, like PCI and the C64x+ Megamodule, have both slave and master ports. Note that each EDMA3 transfer controller has an independent connection to the data SCR.

Note that masters can access the configuration SCR through the data SCR. The configuration SCR is described in Section 4.3.

Not all masters on the C6454 DSP may connect to all slaves. Allowed connections are summarized in Table 4-1.

Copyright © 2006–2012, Texas Instruments Incorporated

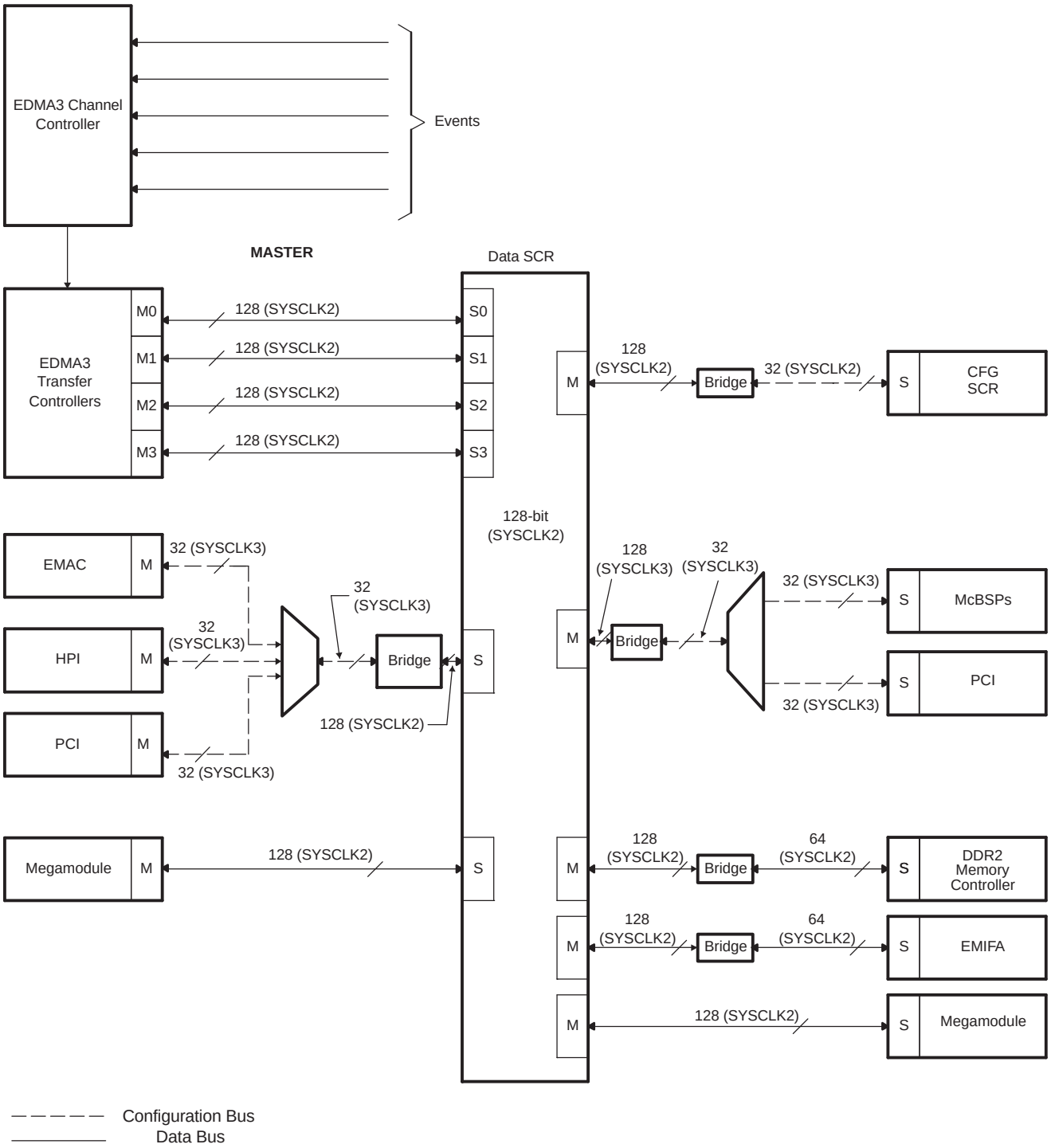

Figure 4-1. Switched Central Resource Block Diagram

Table 4-1. SCR Connection Matrix

	McBSPs	CONFIGURATION SCR	PCI	DDR2 MEMORY CONTROLLER	EMIFA	MEGAMODULE
TC0	N	N	N	Y	Y	Y
TC1	Y	Y	Y	Y	Y	Y
TC2	N	N	Y	Y	Y	Y
TC3	N	N	Y	Y	Y	Y
EMAC	N	N	N	Y	Y	Y
HPI	N	Y	N	Y	Y	Y
PCI	N	Y	N	Y	Y	Y

4.3 Configuration Switch Fabric

Figure 4-2 shows the connection between the C64x+ Megamodule and the configuration switched central resource (SCR). The configuration SCR is mainly used by the C64x+ Megamodule to access peripheral registers. The data SCR also has a connection to the configuration SCR which allows masters to access most peripheral registers. The only registers not accessible by the data SCR through the configuration SCR are the device configuration registers and the PLL1 and PLL2 controller registers; these can only be accessed by the C64x+ Megamodule.

The configuration SCR uses 32-bit configuration buses running at SYSCLK2 frequency. SYSCLK2 is supplied by the PLL1 controller and is fixed at a frequency equal to the CPU frequency divided by 3.

Copyright © 2006–2012, Texas Instruments Incorporated

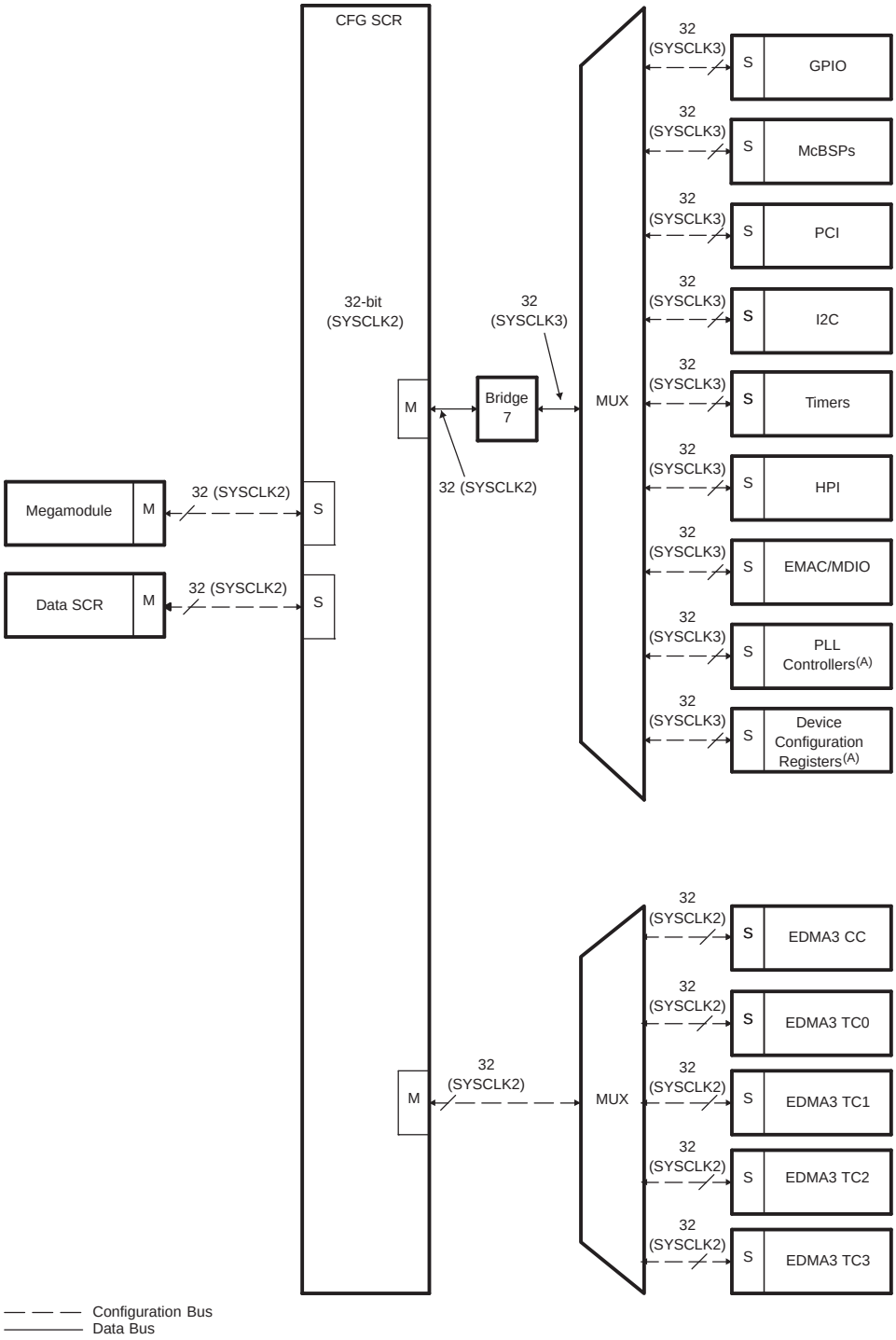

A. Only accessible by the C64x+ Megamodule.
B. All clocks in this figure are generated by the PLL1 controller.

Figure 4-2. C64x+ Megamodule - SCR Connection

4.4 Bus Priorities

On the C6454 device, bus priority is programmable for each master. The register bit fields and default priority levels for C6454 bus masters are shown in Table 4-2. The priority levels should be tuned to obtain the best system performance for a particular application. Lower values indicate higher priorities. For some masters, the priority values are programmed at the system level by configuring the PRI_ALLOC register. Details on the PRI_ALLOC register are shown in Figure 4-3. The C64x+ megamodule and EDMA masters contain registers that control their own priority values.

The priority is enforced when several masters in the system are vying for the same endpoint. Note that the configuration SCR port on the data SCR is considered a single endpoint meaning priority will be enforced when multiple masters try to access the configuration SCR. Priority is also enforced on the configuration SCR side when a master (through the data SCR) tries to access the same endpoint as the C64x+ megamodule.

In the PRI_ALLOC register, the HOST field applies to the priority of the HPI and PCI peripherals. The EMAC field specifies the priority of the EMAC peripheral.

Table 4-2. C6454 Default Bus Master Priorities

BUS MASTER	DEFAULT PRIORITY LEVEL	PRIORITY CONTROL
EDMA3TC0	0	QUEPRI.PRIQ0 (EDMA3 register)
EDMA3TC1	0	QUEPRI.PRIQ1 (EDMA3 register)
EDMA3TC2	0	QUEPRI.PRIQ2 (EDMA3 register)
EDMA3TC3	0	QUEPRI.PRIQ3 (EDMA3 register)
EMAC	1	PRI_ALLOC.EMAC
PCI	2	PRI_ALLOC.HOST
HPI	2	PRI_ALLOC.HOST
C64x+ Megamodule (MDMA port)	7	MDMAARBE.PRI (C64x+ Megamodule Register)

31–16	15–12	11–9	8–6	5–3	2–0
Reserved	Reserved	Reserved	Reserved	HOST	EMAC
R-0000 0000 0000 0000	R-000 0	R/W-001	R-100	R/W-010	R/W-001

LEGEND: R/W = Read/Write; R = Read only; -*n* = value at reset

Figure 4-3. Priority Allocation Register (PRI_ALLOC)

Copyright © 2006–2012, Texas Instruments Incorporated

5 C64x+ Megamodule

The C64x+ Megamodule consists of several components — the C64x+ CPU, the L1 program and data memory controllers, the L2 memory controller, the internal DMA (IDMA), the interrupt controller, power-down controller, and external memory controller. The C64x+ Megamodule also provides support for memory protection (for L1P, L1D, and L2 memories) and bandwidth management (for resources local to the C64x+ Megamodule). Figure 5-1 shows a block diagram of the C64x+ Megamodule.

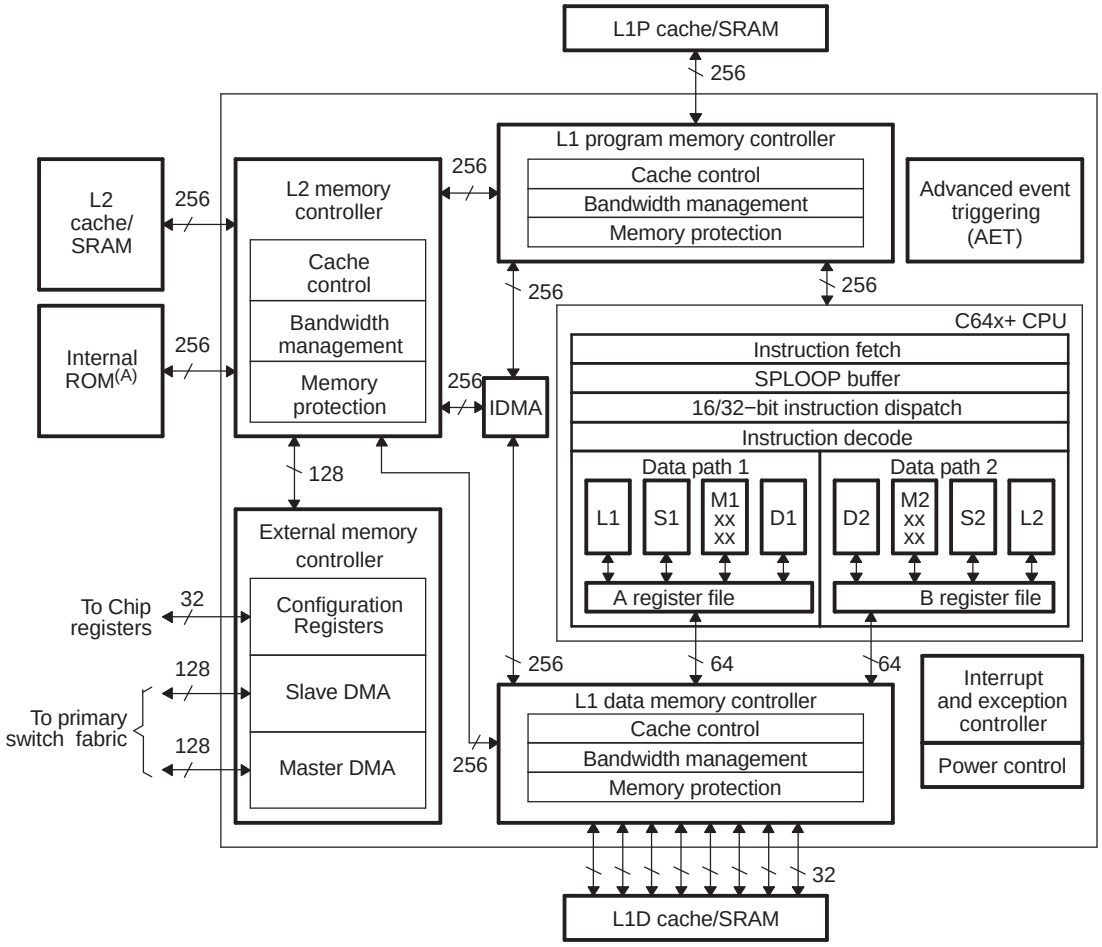

A. When accessing the internal ROM of the DSP, the CPU frequency must always be less than 750 MHz.

Figure 5-1. 64x+ Megamodule Block Diagram

For more detailed information on the TMS320C64x+ Megamodule on the C6454 device, see the *TMS320C64x+ Megamodule Reference Guide* (literature number SPRU871).

5.1 Memory Architecture

The TMS320C6454 device contains a 1024KB level-2 memory (L2), a 32KB level-1 program memory (L1P), and a 32KB level-1 data memory (L1D).

The L1P memory configuration for the C6454 device is as follows:

- Region 0 size is 0K bytes (disabled).
- Region 1 size is 32K bytes with no wait states.

The L1D memory configuration for the C6454 device is as follows:

- Region 0 size is 0K bytes (disabled).
- Region 1 size is 32K bytes with no wait states.

L1D is a two-way set-associative cache while L1P is a direct-mapped cache.

The L1P and L1D cache can be reconfigured via software through the L1PMODE field of the L1P Configuration Register (L1PMODE) and the L1DMODE field of the L1D Configuration Register (L1DCFG) of the C64x+ Megamodule. After device reset, L1P and L1D cache are configured as all cache or all SRAM. The on-chip Bootloader changes the reset configuration for L1P and L1D. For more information, see the *TMS320C645x Bootloader User's Guide* (literature number SPRUEC6).

Figure 5-2 and Figure 5-3 show the available SRAM/cache configurations for L1P and L1D, respectively.

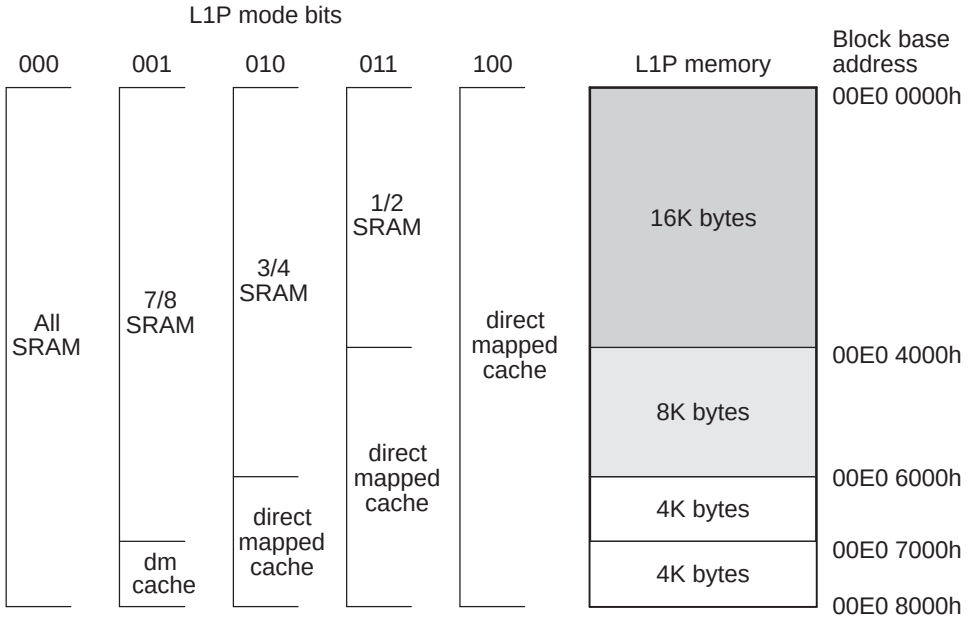

Figure 5-2. TMS320C6454 L1P Memory Configurations

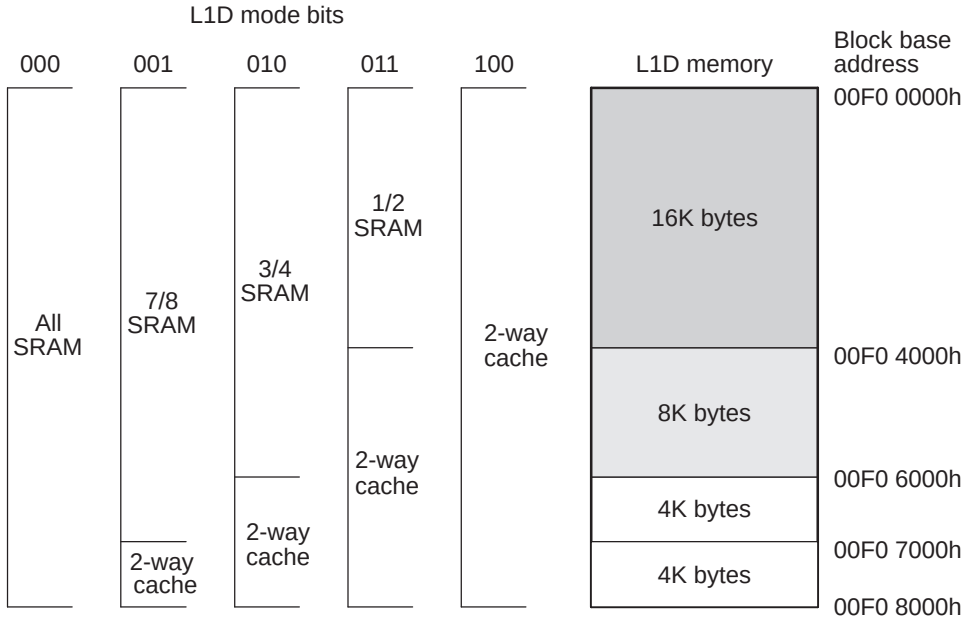

Figure 5-3. TMS320C6454 L1D Memory Configurations

The L2 memory configuration for the C6454 device is as follows:

Copyright © 2006–2012, Texas Instruments Incorporated

- Port 0 configuration:
  - Memory size is 1024KB
  - Starting address is 0080 0000h
  - 2-cycle latency
  - 4 × 128-bit bank configuration
- Port 1 configuration:
  - Memory size is 32K bytes (this corresponds to the internal ROM)
  - Starting address is 0010 0000h
  - 1-cycle latency
  - 1 × 256-bit bank configuration

L2 memory can be configured as all SRAM or as part 4-way set-associative cache. The amount of L2 memory that is configured as cache is controlled through the L2MODE field of the L2 Configuration Register (L2CFG) of the C64x+ Megamodule. Figure 5-4 shows the available SRAM/cache configurations for L2. By default, L2 is configured as all SRAM after device reset.

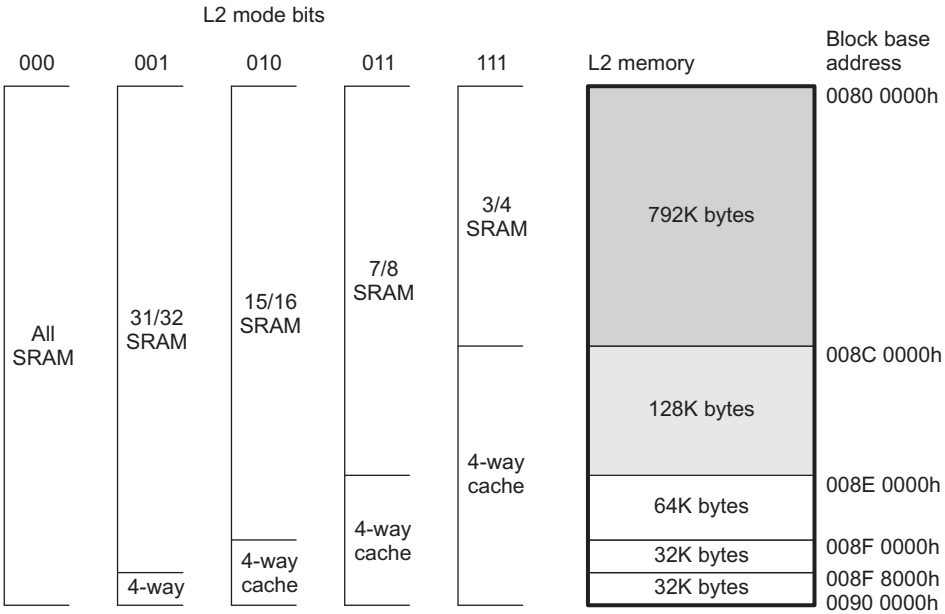

Figure 5-4. TMS320C6454 L2 Memory Configurations

For more information on the operation L1 and L2 caches, see the *TMS320C64x+ DSP Cache User's Guide* (literature number SPRU862).

All memory on the C6454 device has a unique location in the memory map (see Table 2-2).

When accessing the internal ROM of the DSP, the CPU frequency must always be less than 750 MHz. Therefore, when using a software boot mode, care must be taken such that the CPU frequency does not exceed 750 MHz at any point during the boot sequence. After the boot sequence has completed, the CPU frequency can be programmed to the frequency required by the application. For more detailed information ont he boot modes, see Section 2.4, *Boot Sequence*.

5.2 Memory Protection

Memory protection allows an operating system to define who or what is authorized to access L1D, L1P, and L2 memory. To accomplish this, the L1D, L1P, and L2 memories are divided into pages. There are 16 pages of L1P (2KB each), 16 pages of L1D (2KB each), and 16 pages of L2 (64KB each). The L1D, L1P, and L2 memory controllers in the C64x+ Megamodule are equipped with a set of registers that specify the permissions for each memory page.

Copyright © 2006–2012, Texas Instruments Incorporated

Each page may be assigned with fully orthogonal user and supervisor read, write, and execute permissions. Additionally, a page may be marked as either (or both) locally or globally accessible. A local access is a direct CPU access to L1D, L1P, and L2, while a global access is initiated by a DMA (either IDMA or the EDMA3) or by other system masters. Note that EDMA or IDMA transfers programmed by the CPU count as global accesses.

The CPU and the system masters on the C6454 device are all assigned a privilege ID of 0. Therefore it is only possible to specify whether memory pages are locally or globally accessible. The AID0 and LOCAL bits of the memory protection page attribute registers specify the memory page protection scheme, see Table 5-1.

Table 5-1. Available Memory Page Protection Schemes

AID0 Bit	LOCAL Bit	Description
0	0	No access to memory page is permitted.
0	1	Only direct access by CPU is permitted.
1	0	Only accesses by system masters and IDMA are permitted (includes EDMA and IDMA accesses initiated by the CPU).
1	1	All accesses permitted

For more information on memory protection for L1D, L1P, and L2, see the *TMS320C64x+ Megamodule Reference Guide* (literature number SPRU871).

5.3 Bandwidth Management

When multiple requestors contend for a single C64x+ Megamodule resource, the conflict is solved by granting access to the highest priority requestor. The following four resources are managed by the Bandwidth Management control hardware:

- Level 1 Program (L1P) SRAM/Cache
- Level 1 Data (L1D) SRAM/Cache
- Level 2 (L2) SRAM/Cache
- Memory-mapped registers configuration bus

The priority level for operations initiated within the C64x+ Megamodule; e.g., CPU-initiated transfers, user-programmed cache coherency operations, and IDMA-initiated transfers, are declared through registers in the C64x+ Megamodule. The priority level for operations initiated outside the C64x+ Megamodule by system peripherals is declared through the Priority Allocation Register (PRI_ALLOC), see Section 4.4. System peripherals with no fields in PRI_ALLOC have their own registers to program their priorities.

More information on the bandwidth management features of the C64x+ Megamodule can be found in the *TMS320C64x+ Megamodule Reference Guide* (literature number SPRU871).

Copyright © 2006–2012, Texas Instruments Incorporated

5.4 Power-Down Control

The C64x+ Megamodule supports the ability to power-down various parts of the C64x+ Megamodule. The power-down controller (PDC) of the C64x+ Megamodule can be used to power down L1P, the cache control hardware, the CPU, and the entire C64x+ Megamodule. These power-down features can be used to design systems for lower overall system power requirements.

NOTE

The C6454 device does not support power-down modes for the L2 memory at this time.

More information on the power-down features of the C64x+ Megamodule can be found in the *TMS320C64x+ Megamodule Reference Guide* (literature number SPRU871).

5.5 Megamodule Resets

Table 5-2 shows the reset types supported on the C6454 device and they affect the resetting of the Megamodule, either both globally or just locally.

Table 5-2. Megamodule Reset (Global or Local)

RESET TYPE	GLOBAL MEGAMODULE RESET	LOCAL MEGAMODULE RESET
Power-On Reset	Y	Y
Warm Reset	Y	Y
System Reset	Y	Y
CPU Reset	N	Y

For more detailed information on the global and local megamodule resets, see the *TMS320C64x+ Megamodule Reference Guide* (literature number SPRU871) and for more detailed information on device resets, see Section 7.6, *Reset Controller*.

5.6 Megamodule Revision

The version and revision of the C64x+ Megamodule can be read from the Megamodule Revision ID Register (MM_REVID) located at address 0181 2000h. The MM_REVID register is shown in Figure 5-5 and described in Table 5-3. The C64x+ Megamodule revision is dependant on the silicon revision being used. For more information, see the *TMS320C6455/54 Digital Signal Processor Silicon Errata* (literature number SPRZ234).

31 – 16	15 – 0
VERSION	REVISION[A]
R-1h	R-n

LEGEND: R = Read only; *-n* = value after reset

A. The C64x+ Megamodule revision is dependant on the silicon revision being used. For more information, see the *TMS320C6455/54 Digital Signal Processor Silicon Errata* (literature number SPRZ234).

Figure 5-5. Megamodule Revision ID Register (MM_REVID) [Hex Address: 0181 2000h]

Table 5-3. Megamodule Revision ID Register (MM_REVID) Field Descriptions

Bit	Field	Value	Description
31:16	VERSION	1h	Version of the C64x+ Megamodule implemented on the device. This field is always read as 1h.
15:0	REVISION		Revision of the C64x+ Megamodule version implemented on the device. The C64x+ Megamodule revision is dependant on the silicon revision being used. For more information, see the *TMS320C6455/54 Digital Signal Processor Silicon Errata* (literature number SPRZ234).

Copyright © 2006–2012, Texas Instruments Incorporated

5.7 C64x+ Megamodule Register Descriptions

Table 5-4. Megamodule Interrupt Registers

HEX ADDRESS RANGE	ACRONYM	REGISTER NAME
0180 0000	EVTFLAG0	Event Flag Register 0 (Events [31:0])
0180 0004	EVTFLAG1	Event Flag Register 1
0180 0008	EVTFLAG2	Event Flag Register 2
0180 000C	EVTFLAG3	Event Flag Register 3
0180 0010 - 0180 001C	-	Reserved
0180 0020	EVTSET0	Event Set Register 0 (Events [31:0])
0180 0024	EVTSET1	Event Set Register 1
0180 0028	EVTSET2	Event Set Register 2
0180 002C	EVTSET3	Event Set Register 3
0180 0030 - 0180 003C	-	Reserved
0180 0040	EVTCLR0	Event Clear Register 0 (Events [31:0])
0180 0044	EVTCLR1	Event Clear Register 1
0180 0048	EVTCLR2	Event Clear Register 2
0180 004C	EVTCLR3	Event Clear Register 3
0180 0050 - 0180 007C	-	Reserved
0180 0080	EVTMASK0	Event Mask Register 0 (Events [31:0])
0180 0084	EVTMASK1	Event Mask Register 1
0180 0088	EVTMASK2	Event Mask Register 2
0180 008C	EVTMASK3	Event Mask Register 3
0180 0090 - 0180 009C	-	Reserved
0180 00A0	MEVTFLAG0	Masked Event Flag Status Register 0 (Events [31:0])
0180 00A4	MEVTFLAG1	Masked Event Flag Status Register 1
0180 00A8	MEVTFLAG2	Masked Event Flag Status Register 2
0180 00AC	MEVTFLAG3	Masked Event Flag Status Register 3
0180 00B0 - 0180 00BC	-	Reserved
0180 00C0	EXPMASK0	Exception Mask Register 0 (Events [31:0])
0180 00C4	EXPMASK1	Exception Mask Register 1
0180 00C8	EXPMASK2	Exception Mask Register 2
0180 00CC	EXPMASK3	Exception Mask Register 3
0180 00D0 - 0180 00DC	-	Reserved
0180 00E0	MEXPFLAG0	Masked Exception Flag Register 0
0180 00E4	MEXPFLAG1	Masked Exception Flag Register 1
0180 00E8	MEXPFLAG2	Masked Exception Flag Register 2
0180 00EC	MEXPFLAG3	Masked Exception Flag Register 3
0180 00F0 - 0180 00FC	-	Reserved
0180 0100	-	Reserved
0180 0104	INTMUX1	Interrupt Multiplexor Register 1
0180 0108	INTMUX2	Interrupt Multiplexor Register 2
0180 010C	INTMUX3	Interrupt Multiplexor Register 3
0180 0110 - 0180 013C	-	Reserved
0180 0140	AEGMUX0	Advanced Event Generator Mux Register 0
0180 0144	AEGMUX1	Advanced Event Generator Mux Register 1
0180 0148 - 0180 017C	-	Reserved
0180 0180	INTXSTAT	Interrupt Exception Status Register
0180 0184	INTXCLR	Interrupt Exception Clear Register

Copyright © 2006–2012, Texas Instruments Incorporated

Table 5-4. Megamodule Interrupt Registers (continued)

HEX ADDRESS RANGE	ACRONYM	REGISTER NAME
0180 0188	INTDMASK	Dropped Interrupt Mask Register
0180 0188 - 0180 01BC	-	Reserved
0180 01C0	EVTASRT	Event Asserting Register
0180 01C4 - 0180 FFFF	-	Reserved

Table 5-5. Megamodule Powerdown Control Registers

HEX ADDRESS RANGE	ACRONYM	REGISTER NAME
0181 0000	PDCCMD	Power-down controller command register
0181 0004 - 0181 1FFF	-	Reserved

Table 5-6. Megamodule Revision Register

HEX ADDRESS RANGE	ACRONYM	REGISTER NAME
0181 2000	MM_REVID	Megamodule Revision ID Register
0181 2004 - 0181 2FFF	-	Reserved

Table 5-7. Megamodule IDMA Registers

HEX ADDRESS RANGE	ACRONYM	REGISTER NAME
0182 0000	IDMA0STAT	IDMA Channel 0 Status Register
0182 0004	IDMA0MASK	IDMA Channel 0 Mask Register
0182 0008	IMDA0SRC	IDMA Channel 0 Source Address Register
0182 000C	IDMA0DST	IDMA Channel 0 Destination Address Register
0182 0010	IDMA0CNT	IDMA Channel 0 Count Register
0182 0014 - 0182 00FC	-	Reserved
0182 0100	IDMA1STAT	IDMA Channel 1 Status Register
0182 0104	-	Reserved
0182 0108	IMDA1SRC	IDMA Channel 1 Source Address Register
0182 010C	IDMA1DST	IDMA Channel 1 Destination Address Register
0182 0110	IDMA1CNT	IDMA Channel 1 Count Register
0182 0114 - 0182 017C	-	Reserved
0182 0180	-	Reserved
0182 0184 - 0182 01FF	-	Reserved

Copyright © 2006–2012, Texas Instruments Incorporated

Table 5-8. Megamodule Cache Configuration Registers

HEX ADDRESS RANGE	ACRONYM	REGISTER NAME
0184 0000	L2CFG	L2 Cache Configuration Register
0184 0004 - 0184 001F	-	Reserved
0184 0020	L1PCFG	L1P Configuration Register
0184 0024	L1PCC	L1P Cache Control Register
0184 0028 - 0184 003F	-	Reserved
0184 0040	L1DCFG	L1D Configuration Register
0184 0044	L1DCC	L1D Cache Control Register
0184 0048 - 0184 0FFF	-	Reserved
0184 1000 - 0184 104F	-	See Table 5-10, *CPU Megamodule Bandwidth Management Registers*
0184 1050 - 0184 3FFF	-	Reserved
0184 4000	L2WBAR	L2 Writeback Base Address Register - for Block Writebacks
0184 4004	L2WWC	L2 Writeback Word Count Register
0184 4008 - 0184 400C	-	Reserved
0184 4010	L2WIBAR	L2 Writeback and Invalidate Base Address Register - for Block Writebacks
0184 4014	L2WIWC	L2 Writeback and Invalidate word count register
0184 4018	L2IBAR	L2 Invalidate Base Address Register
0184 401C	L2IWC	L2 Invalidate Word Count Register
0184 4020	L1PIBAR	L1P Invalidate Base Address Register
0184 4024	L1PIWC	L1P Invalidate Word Count Register
0184 4030	L1DWIBAR	L1D Writeback and Invalidate Base Address Register
0184 4034	L1DWIWC	L1D Writeback and Invalidate Word Count Register
0184 4038	-	Reserved
0184 4040	L1DWBAR	L1D Writeback Base Address Register - for Block Writebacks
0184 4044	L1DWWC	L1D Writeback Word Count Register
0184 4048	L1DIBAR	L1D Invalidate Base Address Register
0184 404C	L1DIWC	L1D Invalidate Word Count Register
0184 4050 - 0184 4FFF	-	Reserved
0184 5000	L2WB	L2 Global Writeback Register
0184 5004	L2WBINV	L2 Global Writeback and Invalidate Register
0184 5008	L2INV	L2 Global Invalidate Register
0184 500C - 0184 5024	-	Reserved
0184 5028	L1PINV	L1P Global Invalidate Register
0184 502C - 0184 503C	-	Reserved
0184 5040	L1DWB	L1D Global Writeback Register
0184 5044	L1DWBINV	L1D Global Writeback and Invalidate Register
0184 5048	L1DINV	L1D Global Invalidate Register
0184 504C - 0184 7FFF	-	Reserved
0184 8000 - 0184 81FC	MAR0 to MAR127	Reserved
0184 8200 - 0184 823C	MAR128 to MAR143	Reserved
0184 8240 - 0184 827C	MAR144 to MAR159	Reserved
0184 8280	MAR160	Controls EMIFA CE2 Range A000 0000 - A0FF FFFF
0184 8284	MAR161	Controls EMIFA CE2 Range A100 0000 - A1FF FFFF
0184 8288	MAR162	Controls EMIFA CE2 Range A200 0000 - A2FF FFFF
0184 828C	MAR163	Controls EMIFA CE2 Range A300 0000 - A3FF FFFF
0184 8290	MAR164	Controls EMIFA CE2 Range A400 0000 - A4FF FFFF

Copyright © 2006–2012, Texas Instruments Incorporated

Table 5-8. Megamodule Cache Configuration Registers (continued)

HEX ADDRESS RANGE	ACRONYM	REGISTER NAME
0184 8294	MAR165	Controls EMIFA CE2 Range A500 0000 - A5FF FFFF
0184 8298	MAR166	Controls EMIFA CE2 Range A600 0000 - A6FF FFFF
0184 829C	MAR167	Controls EMIFA CE2 Range A700 0000 - A7FF FFFF
0184 82A0	MAR168	Controls EMIFA CE2 Range A800 0000 - A8FF FFFF
0184 82A4	MAR169	Controls EMIFA CE2 Range A900 0000 - A9FF FFFF
0184 82A8	MAR170	Controls EMIFA CE2 Range AA00 0000 - AAFF FFFF
0184 82AC	MAR171	Controls EMIFA CE2 Range AB00 0000 - ABFF FFFF
0184 82B0	MAR172	Controls EMIFA CE2 Range AC00 0000 - ACFF FFFF
0184 82B4	MAR173	Controls EMIFA CE2 Range AD00 0000 - ADFF FFFF
0184 82B8	MAR174	Controls EMIFA CE2 Range AE00 0000 - AEFF FFFF
0184 82BC	MAR175	Controls EMIFA CE2 Range AF00 0000 - AFFF FFFF
0184 82C0	MAR176	Controls EMIFA CE3 Range B000 0000 - B0FF FFFF
0184 82C4	MAR177	Controls EMIFA CE3 Range B100 0000 - B1FF FFFF
0184 82C8	MAR178	Controls EMIFA CE3 Range B200 0000 - B2FF FFFF
0184 82CC	MAR179	Controls EMIFA CE3 Range B300 0000 - B3FF FFFF
0184 82D0	MAR180	Controls EMIFA CE3 Range B400 0000 - B4FF FFFF
0184 82D4	MAR181	Controls EMIFA CE3 Range B500 0000 - B5FF FFFF
0184 82D8	MAR182	Controls EMIFA CE3 Range B600 0000 - B6FF FFFF
0184 82DC	MAR183	Controls EMIFA CE3 Range B700 0000 - B7FF FFFF
0184 82E0	MAR184	Controls EMIFA CE3 Range B800 0000 - B8FF FFFF
0184 82E4	MAR185	Controls EMIFA CE3 Range B900 0000 - B9FF FFFF
0184 82E8	MAR186	Controls EMIFA CE3 Range BA00 0000 - BAFF FFFF
0184 82EC	MAR187	Controls EMIFA CE3 Range BB00 0000 - BBFF FFFF
0184 82F0	MAR188	Controls EMIFA CE3 Range BC00 0000 - BCFF FFFF
0184 82F4	MAR189	Controls EMIFA CE3 Range BD00 0000 - BDFF FFFF
0184 82F8	MAR190	Controls EMIFA CE3 Range BE00 0000 - BEFF FFFF
0184 82FC	MAR191	Controls EMIFA CE3 Range BF00 0000 - BFFF FFFF
0184 8300	MAR192	Controls EMIFA CE4 Range C000 0000 - C0FF FFFF
0184 8304	MAR193	Controls EMIFA CE4 Range C100 0000 - C1FF FFFF
0184 8308	MAR194	Controls EMIFA CE4 Range C200 0000 - C2FF FFFF
0184 830C	MAR195	Controls EMIFA CE4 Range C300 0000 - C3FF FFFF
0184 8310	MAR196	Controls EMIFA CE4 Range C400 0000 - C4FF FFFF
0184 8314	MAR197	Controls EMIFA CE4 Range C500 0000 - C5FF FFFF
0184 8318	MAR198	Controls EMIFA CE4 Range C600 0000 - C6FF FFFF
0184 831C	MAR199	Controls EMIFA CE4 Range C700 0000 - C7FF FFFF
0184 8320	MAR200	Controls EMIFA CE4 Range C800 0000 - C8FF FFFF
0184 8324	MAR201	Controls EMIFA CE4 Range C900 0000 - C9FF FFFF
0184 8328	MAR202	Controls EMIFA CE4 Range CA00 0000 - CAFF FFFF
0184 832C	MAR203	Controls EMIFA CE4 Range CB00 0000 - CBFF FFFF
0184 8330	MAR204	Controls EMIFA CE4 Range CC00 0000 - CCFF FFFF
0184 8334	MAR205	Controls EMIFA CE4 Range CD00 0000 - CDFF FFFF
0184 8338	MAR206	Controls EMIFA CE4 Range CE00 0000 - CEFF FFFF
0184 833C	MAR207	Controls EMIFA CE4 Range CF00 0000 - CFFF FFFF
0184 8340	MAR208	Controls EMIFA CE5 Range D000 0000 - D0FF FFFF
0184 8344	MAR209	Controls EMIFA CE5 Range D100 0000 - D1FF FFFF
0184 8348	MAR210	Controls EMIFA CE5 Range D200 0000 - D2FF FFFF
0184 834C	MAR211	Controls EMIFA CE5 Range D300 0000 - D3FF FFFF

Copyright © 2006–2012, Texas Instruments Incorporated

Table 5-8. Megamodule Cache Configuration Registers (continued)

HEX ADDRESS RANGE	ACRONYM	REGISTER NAME
0184 8350	MAR212	Controls EMIFA CE5 Range D400 0000 - D4FF FFFF
0184 8354	MAR213	Controls EMIFA CE5 Range D500 0000 - D5FF FFFF
0184 8358	MAR214	Controls EMIFA CE5 Range D600 0000 - D6FF FFFF
0184 835C	MAR215	Controls EMIFA CE5 Range D700 0000 - D7FF FFFF
0184 8360	MAR216	Controls EMIFA CE5 Range D800 0000 - D8FF FFFF
0184 8364	MAR217	Controls EMIFA CE5 Range D900 0000 - D9FF FFFF
0184 8368	MAR218	Controls EMIFA CE5 Range DA00 0000 - DAFF FFFF
0184 836C	MAR219	Controls EMIFA CE5 Range DB00 0000 - DBFF FFFF
0184 8370	MAR220	Controls EMIFA CE5 Range DC00 0000 - DCFF FFFF
0184 8374	MAR221	Controls EMIFA CE5 Range DD00 0000 - DDFF FFFF
0184 8378	MAR222	Controls EMIFA CE5 Range DE00 0000 - DEFF FFFF
0184 837C	MAR223	Controls EMIFA CE5 Range DF00 0000 - DFFF FFFF
0184 8380	MAR224	Controls DDR2 CE0 Range E000 0000 - E0FF FFFF
0184 8384	MAR225	Controls DDR2 CE0 Range E100 0000 - E1FF FFFF
0184 8388	MAR226	Controls DDR2 CE0 Range E200 0000 - E2FF FFFF
0184 838C	MAR227	Controls DDR2 CE0 Range E300 0000 - E3FF FFFF
0184 8390	MAR228	Controls DDR2 CE0 Range E400 0000 - E4FF FFFF
0184 8394	MAR229	Controls DDR2 CE0 Range E500 0000 - E5FF FFFF
0184 8398	MAR230	Controls DDR2 CE0 Range E600 0000 - E6FF FFFF
0184 839C	MAR231	Controls DDR2 CE0 Range E700 0000 - E7FF FFFF
0184 83A0	MAR232	Controls DDR2 CE0 Range E800 0000 - E8FF FFFF
0184 83A4	MAR233	Controls DDR2 CE0 Range E900 0000 - E9FF FFFF
0184 83A8	MAR234	Controls DDR2 CE0 Range EA00 0000 - EAFF FFFF
0184 83AC	MAR235	Controls DDR2 CE0 Range EB00 0000 - EBFF FFFF
0184 83B0	MAR236	Controls DDR2 CE0 Range EC00 0000 - ECFF FFFF
0184 83B4	MAR237	Controls DDR2 CE0 Range ED00 0000 - EDFF FFFF
0184 83B8	MAR238	Controls DDR2 CE0 Range EE00 0000 - EEFF FFFF
0184 83BC	MAR239	Controls DDR2 CE0 Range EF00 0000 - EFFF FFFF
0184 83C0 -0184 83FC	MAR240 to MAR255	Reserved

Table 5-9. Megamodule L1/L2 Memory Protection Registers

HEX ADDRESS RANGE	ACRONYM	REGISTER NAME
0184 A000	L2MPFAR	L2 memory protection fault address register
0184 A004	L2MPFSR	L2 memory protection fault status register
0184 A008	L2MPFCR	L2 memory protection fault command register
0184 A00C - 0184 A0FF	-	Reserved
0184 A100	L2MPLK0	L2 memory protection lock key bits [31:0]
0184 A104	L2MPLK1	L2 memory protection lock key bits [63:32]
0184 A108	L2MPLK2	L2 memory protection lock key bits [95:64]
0184 A10C	L2MPLK3	L2 memory protection lock key bits [127:96]
0184 A110	L2MPLKCMD	L2 memory protection lock key command register
0184 A114	L2MPLKSTAT	L2 memory protection lock key status register
0184 A118 - 0184 A1FF	-	Reserved
0184 A200	L2MPPA0	L2 memory protection page attribute register 0
0184 A204	L2MPPA1	L2 memory protection page attribute register 1
0184 A208	L2MPPA2	L2 memory protection page attribute register 2

Copyright © 2006–2012, Texas Instruments Incorporated

Table 5-9. Megamodule L1/L2 Memory Protection Registers (continued)

HEX ADDRESS RANGE	ACRONYM	REGISTER NAME
0184 A20C	L2MPPA3	L2 memory protection page attribute register 3
0184 A210	L2MPPA4	L2 memory protection page attribute register 4
0184 A214	L2MPPA5	L2 memory protection page attribute register 5
0184 A218	L2MPPA6	L2 memory protection page attribute register 6
0184 A21C	L2MPPA7	L2 memory protection page attribute register 7
0184 A220	L2MPPA8	L2 memory protection page attribute register 8
0184 A224	L2MPPA9	L2 memory protection page attribute register 9
0184 A228	L2MPPA10	L2 memory protection page attribute register 10
0184 A22C	L2MPPA11	L2 memory protection page attribute register 11
0184 A230	L2MPPA12	L2 memory protection page attribute register 12
0184 A234	L2MPPA13	L2 memory protection page attribute register 13
0184 A238	L2MPPA14	L2 memory protection page attribute register 14
0184 A23C	L2MPPA15	L2 memory protection page attribute register 15
0184 A240	L2MPPA16	L2 memory protection page attribute register 16
0184 A244	L2MPPA17	L2 memory protection page attribute register 17
0184 A248	L2MPPA18	L2 memory protection page attribute register 18
0184 A24C	L2MPPA19	L2 memory protection page attribute register 19
0184 A250	L2MPPA20	L2 memory protection page attribute register 20
0184 A254	L2MPPA21	L2 memory protection page attribute register 21
0184 A258	L2MPPA22	L2 memory protection page attribute register 22
0184 A25C	L2MPPA23	L2 memory protection page attribute register 23
0184 A260	L2MPPA24	L2 memory protection page attribute register 24
0184 A264	L2MPPA25	L2 memory protection page attribute register 25
0184 A268	L2MPPA26	L2 memory protection page attribute register 26
0184 A26C	L2MPPA27	L2 memory protection page attribute register 27
0184 A270	L2MPPA28	L2 memory protection page attribute register 28
0184 A274	L2MPPA29	L2 memory protection page attribute register 29
0184 A278	L2MPPA30	L2 memory protection page attribute register 30
0184 A27C	L2MPPA31	L2 memory protection page attribute register 31
0184 A280 - 0184 A2FC (1)	-	Reserved
0184 0300 - 0184 A3FF	-	Reserved
0184 A400	L1PMPFAR	L1 program (L1P) memory protection fault address register
0184 A404	L1PMPFSR	L1P memory protection fault status register
0184 A408	L1PMPFCR	L1P memory protection fault command register
0184 A40C - 0184 A4FF	-	Reserved
0184 A500	L1PMPLK0	L1P memory protection lock key bits [31:0]
0184 A504	L1PMPLK1	L1P memory protection lock key bits [63:32]
0184 A508	L1PMPLK2	L1P memory protection lock key bits [95:64]
0184 A50C	L1PMPLK3	L1P memory protection lock key bits [127:96]
0184 A510	L1PMPLKCMD	L1P memory protection lock key command register
0184 A514	L1PMPLKSTAT	L1P memory protection lock key status register
0184 A518 - 0184 A5FF	-	Reserved
0184 A600 - 0184 A63C (2)	-	Reserved
0184 A640	L1PMPPA16	L1P memory protection page attribute register 16

(1) These addresses correspond to the L2 memory protection page attribute registers 32-63 (L2MPPA32-L2MPPA63) of the C64x+ megamaodule. These registers are not supported for the C6454 device.
(2) These addresses correspond to the L1P memory protection page attribute registers 0-15 (L1PMPPA0-L1PMPPA15) of the C64x+ megamaodule. These registers are not supported for the C6454 device.

Copyright © 2006–2012, Texas Instruments Incorporated

Table 5-9. Megamodule L1/L2 Memory Protection Registers (continued)

HEX ADDRESS RANGE	ACRONYM	REGISTER NAME
0184 A644	L1PMPPA17	L1P memory protection page attribute register 17
0184 A648	L1PMPPA18	L1P memory protection page attribute register 18
0184 A64C	L1PMPPA19	L1P memory protection page attribute register 19
0184 A650	L1PMPPA20	L1P memory protection page attribute register 20
0184 A654	L1PMPPA21	L1P memory protection page attribute register 21
0184 A658	L1PMPPA22	L1P memory protection page attribute register 22
0184 A65C	L1PMPPA23	L1P memory protection page attribute register 23
0184 A660	L1PMPPA24	L1P memory protection page attribute register 24
0184 A664	L1PMPPA25	L1P memory protection page attribute register 25
0184 A668	L1PMPPA26	L1P memory protection page attribute register 26
0184 A66C	L1PMPPA27	L1P memory protection page attribute register 27
0184 A670	L1PMPPA28	L1P memory protection page attribute register 28
0184 A674	L1PMPPA29	L1P memory protection page attribute register 29
0184 A678	L1PMPPA30	L1P memory protection page attribute register 30
0184 A67C	L1PMPPA31	L1P memory protection page attribute register 31
0184 A680 - 0184 ABFF	-	Reserved
0184 AC00	L1DMPFAR	L1 data (L1D) memory protection fault address register
0184 AC04	L1DMPFSR	L1D memory protection fault status register
0184 AC08	L1DMPFCR	L1D memory protection fault command register
0184 AC0C - 0184 ACFF	-	Reserved
0184 AD00	L1DMPLK0	L1D memory protection lock key bits [31:0]
0184 AD04	L1DMPLK1	L1D memory protection lock key bits [63:32]
0184 AD08	L1DMPLK2	L1D memory protection lock key bits [95:64]
0184 AD0C	L1DMPLK3	L1D memory protection lock key bits [127:96]
0184 AD10	L1DMPLKCMD	L1D memory protection lock key command register
0184 AD14	L1DMPLKSTAT	L1D memory protection lock key status register
0184 AD18 - 0184 ADFF	-	Reserved
0184 AE00 - 0184 AE3C (3)	-	Reserved
0184 AE40	L1DMPPA16	L1D memory protection page attribute register 16
0184 AE44	L1DMPPA17	L1D memory protection page attribute register 17
0184 AE48	L1DMPPA18	L1D memory protection page attribute register 18
0184 AE4C	L1DMPPA19	L1D memory protection page attribute register 19
0184 AE50	L1DMPPA20	L1D memory protection page attribute register 20
0184 AE54	L1DMPPA21	L1D memory protection page attribute register 21
0184 AE58	L1DMPPA22	L1D memory protection page attribute register 22
0184 AE5C	L1DMPPA23	L1D memory protection page attribute register 23
0184 AE60	L1DMPPA24	L1D memory protection page attribute register 24
0184 AE64	L1DMPPA25	L1D memory protection page attribute register 25
0184 AE68	L1DMPPA26	L1D memory protection page attribute register 26
0184 AE6C	L1DMPPA27	L1D memory protection page attribute register 27
0184 AE70	L1DMPPA28	L1D memory protection page attribute register 28
0184 AE74	L1DMPPA29	L1D memory protection page attribute register 29
0184 AE78	L1DMPPA30	L1D memory protection page attribute register 30
0184 AE7C	L1DMPPA31	L1D memory protection page attribute register 31
0184 AE80 - 0185 FFFF	-	Reserved

(3) These addresses correspond to the L1D memory protection page attribute registers 0-15 (L1DMPPA0-L1DMPPA15) of the C64x+ megamaodule. These registers are not supported for the C6454 device.

Copyright © 2006–2012, Texas Instruments Incorporated

Table 5-10. CPU Megamodule Bandwidth Management Registers

HEX ADDRESS RANGE	ACRONYM	REGISTER NAME
0182 0200	EMCCPUARBE	EMC CPU Arbitration Control Register
0182 0204	EMCIDMAARBE	EMC IDMA Arbitration Control Register
0182 0208	EMCSDMAARBE	EMC Slave DMA Arbitration Control Register
0182 020C	EMCMDMAARBE	EMC Master DMA Arbitration Control Resgiter
0182 0210 - 0182 02FF	-	Reserved
0184 1000	L2DCPUARBU	L2D CPU Arbitration Control Register
0184 1004	L2DIDMAARBU	L2D IDMA Arbitration Control Register
0184 1008	L2DSDMAARBU	L2D Slave DMA Arbitration Control Register
0184 100C	L2DUCARBU	L2D User Coherence Arbitration Control Resgiter
0184 1010 - 0184 103F	-	Reserved
0184 1040	L1DCPUARBD	L1D CPU Arbitration Control Register
0184 1044	L1DIDMAARBD	L1D IDMA Arbitration Control Register
0184 1048	L1DSDMAARBD	L1D Slave DMA Arbitration Control Register
0184 104C	L1DUCARBD	L1D User Coherence Arbitration Control Resgiter

Table 5-11. Device Configuration Registers (Chip-Level Registers)

HEX ADDRESS RANGE	ACRONYM	REGISTER NAME	COMMENTS
02A8 0000	DEVSTAT	Device Status Register	Read-only. Provides status of the user's device configuration on reset.
02A8 0004	PRI_ALLOC	Priority Allocation Register	Sets priority for Master peripherals
02A8 0008	JTAGID	JTAG and BSDL Identification Register	Read-only. Provides 32-bit JTAG ID of the device.
02A8 000C - 02AB FFFF	-	Reserved	
02AC 0000	-	Reserved	
02AC 0004	PERLOCK	Peripheral Lock Register	
02AC 0008	PERCFG0	Peripheral Configuration Register 0	
02AC 000C	-	Reserved	
02AC 0010	-	Reserved	
02AC 0014	PERSTAT0	Peripheral Status Register 0	
02AC 0018	PERSTAT1	Peripheral Status Register 1	
02AC 001C - 02AC 001F	-	Reserved	
02AC 0020	EMACCFG	EMAC Configuration Register	
02AC 0024 - 02AC 002B	-	Reserved	
02AC 002C	PERCFG1	Peripheral Configuration Register 1	
02AC 0030 - 02AC 0053	-	Reserved	
02AC 0054	EMUBUFPD	Emulator Buffer Powerdown Register	
02AC 0058	-	Reserved	

Copyright © 2006–2012, Texas Instruments Incorporated

6 Device Operating Conditions

6.1 Absolute Maximum Ratings Over Operating Case Temperature Range (Unless Otherwise Noted)(1)

Supply voltage range:	CV_{DD} (2)	-0.5 V to 1.5 V
	DV_{DD33} (2)	-0.5 V to 4.2 V
	DV_{DD15}, DV_{DD18}, AV_{DLL1}, AV_{DLL2} (2)	-0.5 V to 2.5 V
	PLLV1, PLLV2(2)	-0.5 V to 2.5 V
Input voltage (V_I) range:	3.3-V pins (except PCI-capable pins)	-0.5 V to DV_{DD33} + 0.5 V
	PCI-capable pins	-0.5 V to DV_{DD33} + 0.5 V
	RGMII pins	-0.5 V to 2.5 V
	DDR2 memory controller pins	-0.5 V to 2.5 V
Output voltage (V_O) range:	3.3-V pins (except PCI-capable pins)	-0.5 V to DV_{DD33} + 0.5 V
	PCI-capable pins	-0.5 V to DV_{DD33} + 0.5 V
	RGMII pins	-0.5 V to 2.5 V
	DDR2 memory controller pins	-0.5 V to 2.5 V
Operating case temperature range, T_C:	(default)	0°C to 90°C
	(A version) [A-1000 device]	-40°C to 105°C
Storage temperature range, T_{stg}		-65°C to 150°C

(1) Stresses beyond those listed under "absolute maximum ratings" may cause permanent damage to the device. These are stress ratings only, and functional operation of the device at these or any other conditions beyond those indicated under "recommended operating conditions" is not implied. Exposure to absolute-maximum-rated conditions for extended periods may affect device reliability.
(2) All voltage values are with respect to V_{SS}.

6.2 Recommended Operating Conditions

			MIN	NOM	MAX	UNIT
CV_{DD}	Supply voltage, Core	A-1000/-1000	1.2125	1.25	1.2875	V
		-850 -720	1.1640	1.20	1.2360	V
DV_{DD33}	Supply voltage, I/O		3.14	3.3	3.46	V
DV_{DD18}	Supply voltage, I/O		1.71	1.8	1.89	V
AV_{DLL1}	Supply voltage, I/O		1.71	1.8	1.89	V
AV_{DLL2}	Supply voltage, I/O		1.71	1.8	1.89	V
$V_{REFSSTL}$	Reference voltage		$0.49DV_{DD18}$	$0.50DV_{DD18}$	$0.51DV_{DD18}$	V
DV_{DD15}	Supply voltage, I/O [required only for EMAC RGMII]	1.8-V operation	1.71	1.8	1.89	V
		1.5-V operation	1.43	1.5	1.57	V
$V_{REFHSTL}$	Reference voltage	1.8-V operation	0.855	0.9	0.945	V
		1.5-V operation	0.713	0.75	0.787	V
PLLV1, PLLV2	Supply voltage, PLL		1.71	1.8	1.89	V
V_{SS}	Supply ground		0	0	0	V

Copyright © 2006–2012, Texas Instruments Incorporated

Recommended Operating Conditions *(continued)*

			MIN	NOM	MAX	UNIT
V_{IH}	High-level input voltage	3.3 V pins (except PCI-capable and I2C pins)	2			V
		PCI-capable pins(1)	$0.5DV_{DD33}$		DV_{DD33} + 0.5	V
		I2C pins	$0.7DV_{DD33}$			V
		RGMII pins	$V_{REFHSTL}$ + 0.10		DV_{DD15} + 0.30	V
		DDR2 memory controller pins (DC)	$V_{REFSSTL}$ + 0.125		DV_{DD18} + 0.3	V
V_{IL}	Low-level input voltage	3.3 V pins (except PCI-capable and I2C pins)			0.8	V
		PCI-capable pins(1)	-0.5		$0.3DV_{DD33}$	V
		I2C pins	0		$0.3DV_{DD33}$	V
		RGMII pins	-0.3		$V_{REFHSTL}$ - 0.1	V
		DDR2 memory controller pins (DC)	-0.3		$V_{REFSSTL}$ - 0.125	V
V_{OS}	Maximum voltage during overshoot/undershoot (PCI-capable pins)(2) (3)	I/O V_{DD} = 1.5 V (EMAC RGMII)	-0.450		1.950	V
		I/O V_{DD} = 1.8 V (EMAC RGMII, DDR2)	-0.540		2.340	
		I/O V_{DD} = 3.3 V (except PCI-capable pins)	-1.000		4.300	
T_C	Operating case temperature	commercial temperature	0		90	°C
		extended temperature	-40		105	

(1) These rated numbers are from the *PCI Local Bus Specification* (version 2.3). The DC specifications and AC specifications are defined in Table 4-3 and Table 4-4, respectively, of the *PCI Local Bus Specification*.
(2) PCI-capable pins can withstand a maximum overshoot/undershoot for up to 11 ns as required by the *PCI Local Bus Specification* (version 2.3).
(3) Duration of overshoot/undershoot must not exceed 30% of the cycle period.

Copyright © 2006–2012, Texas Instruments Incorporated

6.3 Electrical Characteristics Over Recommended Ranges of Supply Voltage and Operating Case Temperature (Unless Otherwise Noted)

PARAMETER			TEST CONDITIONS[1]	MIN	TYP	MAX	UNIT
V_{OH}	High-level output voltage	3.3-V pins (except PCI-capable and I2C pins)	DV_{DD33} = MIN, I_{OH} = MAX	$0.8DV_{DD33}$			V
		PCI-capable pins[2]	I_{OH} = -0.5 mA, DV_{DD33} = 3.3 V	$0.9DV_{DD33}$			V
		RGMII pins		DV_{DD15} - 0.4			V
		DDR2 memory controller pins		1.4			V
V_{OL}	Low-level output voltage	3.3-V pins (except PCI-capable and I2C pins)	DV_{DD33} = MIN, I_{OL} = MAX			$0.22DV_{DD33}$	V
		PCI-capable pins[2]	I_{OL} = 1.5 mA, DV_{DD33} = 3.3 V			$0.1DV_{DD33}$	V
		I2C pins	Pulled up to 3.3 V, 3 mA sink current			0.4	V
		RGMII pins				0.4	V
		DDR2 memory controller pins				0.4	V
I_I [3]	Input current [DC]	3.3-V pins (except PCI-capable and I2C pins)	$V_I = V_{SS}$ to DV_{DD33}, pins without internal pullup or pulldown resistor	-1		1	uA
			$V_I = V_{SS}$ to DV_{DD33}, pins with internal pullup resistor	50	100	400	uA
			$V_I = V_{SS}$ to DV_{DD33}, pins with internal pulldown resistor	-400	-100	-50	uA
		I2C pins	$0.1DV_{DD33} \le V_I \le 0.9DV_{DD33}$	-10		10	uA
		PCI-capable pins[4]		-1000		1000	uA
		RGMII pins				0.4	V
I_{OH}	High-level output current [DC]	AECLKOUT, CLKR1/GP[0], CLKX1/GP[3], SYSCLK4/GP[1], EMU[18:0], CLKR0, CLKX0				-8	mA
		EMIF pins (except AECLKOUT), NMI, TOUT0L, TINP0L, TOUT1L, TINP1L, PCI_EN, EMAC-capable pins (except RGMII pins), RESETSTAT, McBSP-capable pins (except CLKR1/GP[0], CLKX1/GP[3], CLKR0, CLKX0), GP[7:4], and TDO				-4	mA
		PCI-capable pins[2]				-0.5	mA
		RGMII pins				-8	mA
		DDR2 memory controller pins				4	mA

(1) For test conditions shown as MIN, MAX, or NOM, use the appropriate value specified in the recommended operating conditions table.
(2) These rated numbers are from the *PCI Local Bus Specification* (version 2.3). The DC specifications and AC specifications are defined in Table 4-3 and Table 4-4, respectively, of the *PCI Local Bus Specification*.
(3) I_I applies to input-only pins and bi-directional pins. For input-only pins, I_I indicates the input leakage current. For bi-directional pins, I_I includes input leakage current and off-state (hi-Z) output leakage current.
(4) PCI input leakage currents include Hi-Z output leakage for all bidirectional buffers with 3-state outputs.

Copyright © 2006–2012, Texas Instruments Incorporated

Electrical Characteristics Over Recommended Ranges of Supply Voltage and Operating Case Temperature (Unless Otherwise Noted) *(continued)*

PARAMETER			TEST CONDITIONS[1]	MIN	TYP	MAX	UNIT
I_{OL}	Low-level output current [DC]	AECLKOUT, CLKR1/GP[0], CLKX1/GP[3], SYSCLK4/GP[1], EMU[18:0], CLKR0, CLKX0				8	mA
		EMIF pins (except AECLKOUT), NMI, TOUT0L, TINP0L, TOUTP1L, TINP1L, PCI_EN, EMAC-capable pins (except RGMII pins), $\overline{\text{RESETSTAT}}$, McBSP-capable pins (except CLKR1/GP[0], CLKX1/GP[3], CLKR0, CLKX0), GP[7:4], and TDO				4	mA
		PCI-capable pins[2]				1.5	mA
		RGMII pins				8	mA
		DDR2 memory controller pins				-4	mA
I_{OZ} [5]	Off-state output current [DC]	3.3-V pins	$V_O = DV_{DD33}$ or 0 V	-20		20	uA
P_{CDD}	Core supply power[6]		CV_{DD} = 1.25 V, CPU frequency = 1000 MHz		1.66		W
			CV_{DD} = 1.2 V, CPU frequency = 850 MHz		1.41		W
			CV_{DD} = 1.2 V, CPU frequency = 720 MHz		1.29		W
P_{DDD}	I/O supply power[6]		DV_{DD33} = 3.3 V, DV_{DD18} = 1.8 V, PLLV1 = PLLV2 = AV_{DLL1} = AV_{DLL2} = 1.8 V, CPU frequency = 1000 MHz		0.53		W
			DV_{DD33} = 3.3 V, DV_{DD18} = 1.8 V, PLLV1 = PLLV2 = AV_{DLL1} = AV_{DLL2} = 1.8 V, CPU frequency = 850 MHz		0.53		W
			DV_{DD33} = 3.3 V, DV_{DD18} = 1.8 V, PLLV1 = PLLV2 = AV_{DLL1} = AV_{DLL2} = 1.8 V, CPU frequency = 720 MHz		0.52		W
C_i	Input capacitance					10	pF
C_o	Output capacitance					10	pF

(5) I_{OZ} applies to output-only pins, indicating off-state (hi-Z) output leakage current.
(6) Assumes the following conditions: 60% CPU utilization; DDR2 at 50% utilization (250 MHz), 50% writes, 32 bits, 50% bit switching; two 2-MHz McBSPs at 100% utilization, 50% switching; two 75-MHz Timers at 100% utilization; device configured for HPI32 mode with pull-up resistors on HPI pins; room temperature (25°C). The actual current draw is highly application-dependent. For more details on core and I/O activity, see the *TMS320C6455/54 Power Consumption Summary* application report (literature number SPRAAE8).

Copyright © 2006–2012, Texas Instruments Incorporated

7 C64x+ Peripheral Information and Electrical Specifications

7.1 Parameter Information

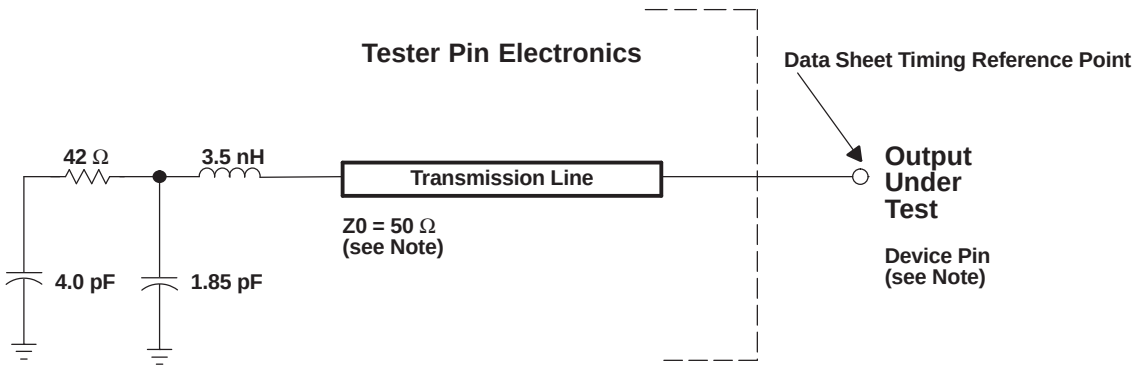

NOTE: The data sheet provides timing at the device pin. For output timing analysis, the tester pin electronics and its transmission line effects must be taken into account. A transmission line with a delay of 2 ns can be used to produce the desired transmission line effect. The transmission line is intended as a load only. It is not necessary to add or subtract the transmission line delay (2 ns) from the data sheet timings.

Input requirements in this data sheet are tested with an input slew rate of < 4 Volts per nanosecond (4 V/ns) at the device pin.

Figure 7-1. Test Load Circuit for AC Timing Measurements

The load capacitance value stated is only for characterization and measurement of AC timing signals. This load capacitance value does not indicate the maximum load the device is capable of driving.

7.1.1 3.3-V Signal Transition Levels

All input and output timing parameters are referenced to 1.5 V for both "0" and "1" logic levels.

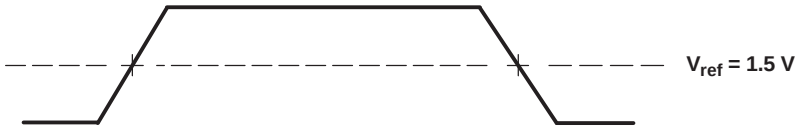

Figure 7-2. Input and Output Voltage Reference Levels for AC Timing Measurements

All rise and fall transition timing parameters are referenced to V_{IL} MAX and V_{IH} MIN for input clocks, V_{OL}MAX and V_{OH} MIN for output clocks.

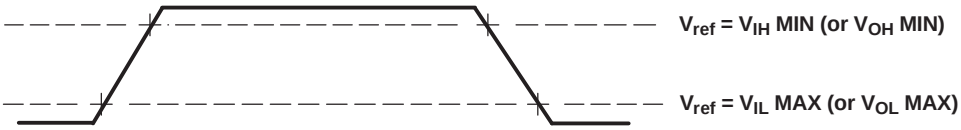

Figure 7-3. Rise and Fall Transition Time Voltage Reference Levels

7.1.2 3.3-V Signal Transition Rates

All timings are tested with an input edge rate of 4 volts per nanosecond (4 V/ns).

7.1.3 Timing Parameters and Board Routing Analysis

The timing parameter values specified in this data sheet do *not* include delays by board routings. As a good board design practice, such delays must *always* be taken into account. Timing values may be adjusted by increasing/decreasing such delays. TI recommends utilizing the available I/O buffer information specification (IBIS) models to analyze the timing characteristics correctly. To properly use IBIS models to attain accurate timing analysis for a given system, see the *Using IBIS Models for Timing Analysis* application report (literature number SPRA839). If needed, external logic hardware such as buffers may be used to compensate any timing differences.

For inputs, timing is most impacted by the round-trip propagation delay from the DSP to the external device and from the external device to the DSP. This round-trip delay tends to negatively impact the input setup time margin, but also tends to improve the input hold time margins (see Table 7-1 and Figure 7-4).

Figure 7-4 represents a general transfer between the DSP and an external device. The figure also represents board route delays and how they are perceived by the DSP and the external device.

Table 7-1. Board-Level Timing Example (see Figure 7-4)

NO.	DESCRIPTION
1	Clock route delay
2	Minimum DSP hold time
3	Minimum DSP setup time
4	External device hold time requirement
5	External device setup time requirement
6	Control signal route delay
7	External device hold time
8	External device access time
9	DSP hold time requirement
10	DSP setup time requirement
11	Data route delay

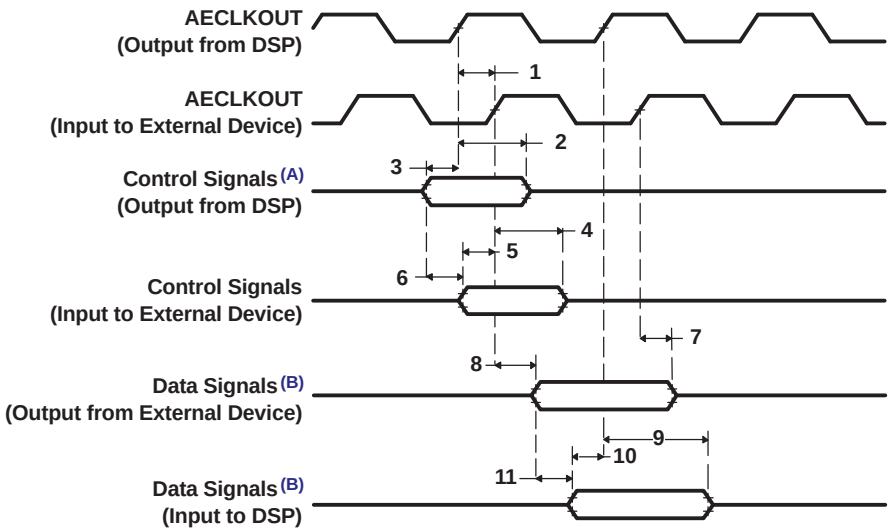

A. Control signals include data for Writes.

B. Data signals are generated during Reads from an external device.

Figure 7-4. Board-Level Input/Output Timings

Copyright © 2006–2012, Texas Instruments Incorporated

7.2 Recommended Clock and Control Signal Transition Behavior

All clocks and control signals ***must*** transition between V_{IH} and V_{IL} (or between V_{IL} and V_{IH}) in a monotonic manner.

7.3 Power Supplies

7.3.1 Power-Supply Sequencing

TI recommends the power-supply sequence shown in Figure 7-5. After the DV_{DD33} supply is stable, the remaining power supplies can be powered up at the same time as CV_{DD} as long as their supply voltage never exceeds the CV_{DD} voltage during powerup. Some TI power-supply devices include features that facilitate power sequencing; for example, Auto-Track or Slow-Start/Enable features. For more information, visit www.ti.com/dsppower.

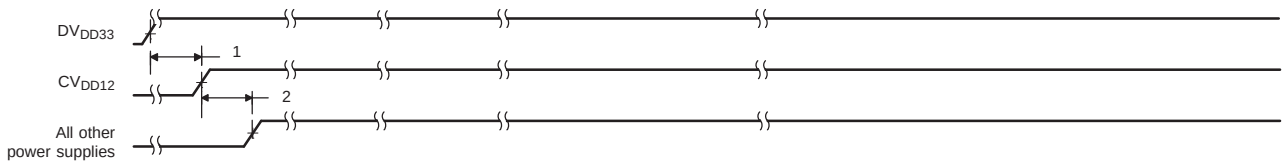

Figure 7-5. Power-Supply Sequence

Table 7-2. Timing Requirements for Power-Supply Sequence

NO.		-720 -850 A-1000/-1000		UNIT
		MIN	MAX	
1	$t_{su(DVDD33-CVDD12)}$ Setup time, DV_{DD33} supply stable before CV_{DD12} supply stable	0.5	200	ms
2	$t_{su(CVDD12-ALLSUP)}$ Setup time, CV_{DD12} supply stable before all other supplies stable	0	200	ms

7.3.2 Power-Supply Decoupling

In order to properly decouple the supply planes from system noise, place as many capacitors (caps) as possible close to the DSP. These caps need to be close to the DSP, no more than 1.25 cm maximum distance to be effective. Physically smaller caps are better, such as 0402, but need to be evaluated from a yield/manufacturing point-of-view. Parasitic inductance limits the effectiveness of the decoupling capacitors, therefore physically smaller capacitors should be used while maintaining the largest available capacitance value. As with the selection of any component, verification of capacitor availability over the product's production lifetime should be considered.

7.3.3 Power-Down Operation

One of the power goals for the C6454 device is to reduce power dissipation due to unused peripherals. There are different ways to power down peripherals on the C6454 device.

Some peripherals can be statically powered down at device reset through the device configuration pins (see Section 3.1, *Device Configuration at Device Reset*). Once in a static power-down state, the peripheral is held in reset and its clock is turned off. Peripherals cannot be enabled once they are in a static power-down state. To take a peripheral out of the static power-down state, a device reset must be executed with a different configuration pin setting.

After device reset, all peripherals on the C6454 device are in a disabled state and must be enabled by software before being used. It is possible to enable only the peripherals needed by the application while keeping the rest disabled. Note that peripherals in a disabled state are held in reset with their clocks gated. For more information on how to enable peripherals, see Section 3.3, *Peripheral Selection After Device Reset*.

Peripherals used for booting, like I2C and HPI, are automatically enabled after device reset. It is not possible to disable these peripherals after the boot process is complete.

The C64x+ Megamodule also allows for software-driven power-down management for all of the C64x+ megamodule components through its Power-Down Controller (PDC). The CPU can power-down part or the entire C64x+ megamodule through the power-down controller based on its own execution thread or in response to an external stimulus from a host or global controller. More information on the power-down features of the C64x+ Megamodule can be found in the *TMS320C64x+ Megamodule Reference Guide* (literature number SPRU871).

7.3.4 Preserving Boundary-Scan Functionality on RGMII and DDR2 Memory Pins

When the RGMII mode of the EMAC is not used, the DV_{DD15}, $DV_{DD15MON}$, $V_{REFHSTL}$, RSV13, and RSV14 pins can be connected directly to ground (V_{SS}) to save power. However, this will prevent boundary-scan from functioning on the RGMII pins of the EMAC. To preserve boundary-scan functionality on the RGMII pins, DV_{DD15}, $V_{REFHSTL}$, RSV14, and RSV13 should be connected as follows:

- DV_{DD15} and $DV_{DD15MON}$ - connect these pins to the 1.8-V I/O supply (DV_{DD18}).
- $V_{REFHSTL}$ - connect to a voltage of $DV_{DD18}/2$. The $DV_{DD18}/2$ voltage can be generated directly from the DV_{DD18} supply using two 1-kΩ resistors to form a resistor divider circuit.
- RSV13 - connect this pin to ground (V_{SS}) via a 200-Ω resistor.
- RSV14 - connect this pin to the 1.8-V I/O supply (DV_{DD18}) via a 200-Ω resistor.

Similarly, when the DDR2 Memory Controller is not used, the $V_{REFSSTL}$, RSV11, and RSV12 pins can be connected directly to ground (V_{SS}) to save power. However, this will prevent boundary-scan from functioning on the DDR2 Memory Controller pins. To preserve boundary-scan functionality on the DDR2 Memory Controller pins, $V_{REFSSTL}$, RSV11, and RSV12 should be connected as follows:

- $V_{REFSSTL}$ - connect to a voltage of $DV_{DD18}/2$. The $DV_{DD18}/2$ voltage can be generated directly from the DV_{DD18} supply using two 1-kΩ resistors to form a resistor divider circuit.
- RSV11 - connect this pin to ground (V_{SS}) via a 200-Ω resistor.
- RSV12 - connect this pin to the 1.8-V I/O supply (DV_{DD18}) via a 200-Ω resistor.

Copyright © 2006–2012, Texas Instruments Incorporated

7.4 Enhanced Direct Memory Access (EDMA3) Controller

The primary purpose of the EDMA3 is to service user-programmed data transfers between two memory-mapped slave endpoints on the device. The EDMA3 services software-driven paging transfers (e.g., data movement between external memory and internal memory), performs sorting or subframe extraction of various data structures, services event driven peripherals such as the McBSP, and offloads data transfers from the device CPU.

The EDMA3 includes the following features:

- Fully orthogonal transfer description
  - 3 transfer dimensions: array (multiple bytes), frame (multiple arrays), and block (multiple frames)
  - Single event can trigger transfer of array, frame, or entire block
  - Independent indexes on source and destination
- Flexible transfer definition:
  - Increment or FIFO transfer addressing modes
  - Linking mechanism allows for ping-pong buffering, circular buffering, and repetitive/continuous transfers, all with no CPU intervention
  - Chaining allows multiple transfers to execute with one event
- 256 PaRAM entries
  - Used to define transfer context for channels
  - Each PaRAM entry can be used as a DMA entry, QDMA entry, or link entry
- 64 DMA channels
  - Manually triggered (CPU writes to channel controller register), external event triggered, and chain triggered (completion of one transfer triggers another)
- 4 Quick DMA (QDMA) channels
  - Used for software-driven transfers
  - Triggered upon writing to a single PaRAM set entry
- 4 transfer controllers/event queues with programmable system-level priority
- Interrupt generation for transfer completion and error conditions
- Memory protection support
  - Active memory protection for accesses to PaRAM and registers
- Debug visibility
  - Queue watermarking/threshold allows detection of maximum usage of event queues
  - Error and status recording to facilitate debug

Each of the transfer controllers has a direct connection to the switched central resource (SCR).

NOTE

Although the transfer controllers are directly connected to the SCR, they can only access certain device resources. For example, only transfer controller 1 (TC1) can access the McBSPs. lists the device resources that can be accessed by each of the transfer controllers.

7.4.1 EDMA3 Device-Specific Information

The EDMA supports two addressing modes: constant addressing and increment addressing mode. On the C6454 DSP, constant addressing mode is not supported by any peripheral or internal memory. For more information on these two addressing modes, see the *TMS320C645x DSP Enhanced DMA (EDMA3) Controller User's Guide* (literature number SPRU966).

A DSP interrupt must be generated at the end of an HPI or PCI boot operation to begin execution of the loaded application. Since the DSP interrupt generated by the HPI and PCI is mapped to the EDMA event DSP_EVT (DMA channel 0), it will get recorded in bit 0 of the EDMA Event Register (ER). This event must be cleared by software before triggering transfers on DMA channel 0. The EDMA3 on the C6454 DSP supports active memory protection, but it does not support proxied memory protection.

7.4.2 EDMA3 Channel Synchronization Events

The EDMA3 supports up to 64 DMA channels that can be used to service system peripherals and to move data between system memories. DMA channels can be triggered by synchronization events generated by system peripherals. Table 7-3 lists the source of the synchronization event associated with each of the DMA channels. On the C6454 device, the association of each synchronization event and DMA channel is fixed and cannot be reprogrammed.

For more detailed information on the EDMA3 module and how EDMA3 events are enabled, captured, processed, prioritized, linked, chained, and cleared, etc., see the *TMS320C645x DSP Enhanced DMA (EDMA3) Controller User's Guide* (literature number SPRU966).

Table 7-3. C6454 EDMA3 Channel Synchronization Events(1)

EDMA CHANNEL	BINARY	EVENT NAME	EVENT DESCRIPTION
0(2)	000 0000	DSP_EVT	HPI/PCI-to-DSP event
1	000 0001	TEVTLO0	Timer 0 lower counter event
2	000 0010	TEVTHI0	Timer 0 high counter event
3	000 0011	-	None
4	000 0100	-	None
5	000 0101	-	None
6	000 0110	-	None
7	000 0111	-	None
8	000 1000	-	None
9	000 1001	-	None
10	000 1010	-	None
11	000 1011	-	None
12	000 1100	XEVT0	McBSP0 transmit event
13	000 1101	REVT0	McBSP0 receive event
14	000 1110	XEVT1	McBSP1 transmit event
15	000 1111	REVT1	McBSP1 receive event
16	001 0000	TEVTLO1	Timer 1 lower counter event
17	001 0001	TEVTHI1	Timer 1 high counter event
18-43	-	-	None
44	010 1100	ICREVT	I2C receive event
45	010 1101	ICXEVT	I2C transmit event
46-47	-	-	None

(1) In addition to the events shown in this table, each of the 64 channels can also be synchronized with the transfer completion or alternate transfer completion events. For more detailed information on EDMA event-transfer chaining, see the *TMS320C645x DSP Enhanced DMA (EDMA3) Controller User's Guide* (literature number SPRU966).
(2) HPI boot and PCI boot are terminated using a DSP interrupt. The DSP interrupt is registered in bit 0 (channel 0) of the EDMA Event Register (ER). This event must be cleared by software before triggering transfers on DMA channel 0.

 Copyright © 2006–2012, Texas Instruments Incorporated

Table 7-3. C6454 EDMA3 Channel Synchronization Events[1] (continued)

EDMA CHANNEL	BINARY	EVENT NAME	EVENT DESCRIPTION
48	011 0000	GPINT0	GPIO event 0
49	011 0001	GPINT1	GPIO event 1
50	011 0010	GPINT2	GPIO event 2
51	011 0011	GPINT3	GPIO event 3
52	011 0100	GPINT4	GPIO event 4
53	011 0101	GPINT5	GPIO event 5
54	011 0110	GPINT6	GPIO event 6
55	011 0111	GPINT7	GPIO event 7
56	011 1000	GPINT8	GPIO event 8
57	011 1001	GPINT9	GPIO event 9
58	011 1010	GPINT10	GPIO event 10
59	011 1011	GPINT11	GPIO event 11
60	011 1100	GPINT12	GPIO event 12
61	011 1101	GPINT13	GPIO event 13
62	011 1110	GPINT14	GPIO event 14
63	011 1111	GPINT15	GPIO event 15

7.4.3 EDMA3 Peripheral Register Descriptions

Table 7-4. EDMA3 Channel Controller Registers

HEX ADDRESS RANGE	ACRONYM	REGISTER NAME
02A0 0000	PID	Peripheral ID Register
02A0 0004	CCCFG	EDMA3CC Configuration Register
02A0 0008 - 02A0 00FC	-	Reserved
02A0 0100	DCHMAP0	DMA Channel 0 Mapping Register
02A0 0104	DCHMAP1	DMA Channel 1 Mapping Register
02A0 0108	DCHMAP2	DMA Channel 2 Mapping Register
02A0 010C	DCHMAP3	DMA Channel 3 Mapping Register
02A0 0110	DCHMAP4	DMA Channel 4 Mapping Register
02A0 0114	DCHMAP5	DMA Channel 5 Mapping Register
02A0 0118	DCHMAP6	DMA Channel 6 Mapping Register
02A0 011C	DCHMAP7	DMA Channel 7 Mapping Register
02A0 0120	DCHMAP8	DMA Channel 8 Mapping Register
02A0 0124	DCHMAP9	DMA Channel 9 Mapping Register
02A0 0128	DCHMAP10	DMA Channel 10 Mapping Register
02A0 012C	DCHMAP11	DMA Channel 11 Mapping Register
02A0 0130	DCHMAP12	DMA Channel 12 Mapping Register
02A0 0134	DCHMAP13	DMA Channel 13 Mapping Register
02A0 0138	DCHMAP14	DMA Channel 14 Mapping Register
02A0 013C	DCHMAP15	DMA Channel 15 Mapping Register
02A0 0140	DCHMAP16	DMA Channel 16 Mapping Register
02A0 0144	DCHMAP17	DMA Channel 17 Mapping Register
02A0 0148	DCHMAP18	DMA Channel 18 Mapping Register
02A0 014C	DCHMAP19	DMA Channel 19 Mapping Register
02A0 0150	DCHMAP20	DMA Channel 20 Mapping Register
02A0 0154	DCHMAP21	DMA Channel 21 Mapping Register

Copyright © 2006–2012, Texas Instruments Incorporated

Table 7-4. EDMA3 Channel Controller Registers (continued)

HEX ADDRESS RANGE	ACRONYM	REGISTER NAME
02A0 0158	DCHMAP22	DMA Channel 22 Mapping Register
02A0 015C	DCHMAP23	DMA Channel 23 Mapping Register
02A0 0160	DCHMAP24	DMA Channel 24 Mapping Register
02A0 0164	DCHMAP25	DMA Channel 25 Mapping Register
02A0 0168	DCHMAP26	DMA Channel 26 Mapping Register
02A0 016C	DCHMAP27	DMA Channel 27 Mapping Register
02A0 0170	DCHMAP28	DMA Channel 28 Mapping Register
02A0 0174	DCHMAP29	DMA Channel 29 Mapping Register
02A0 0178	DCHMAP30	DMA Channel 30 Mapping Register
02A0 017C	DCHMAP31	DMA Channel 31 Mapping Register
02A0 0180	DCHMAP32	DMA Channel 32 Mapping Register
02A0 0184	DCHMAP33	DMA Channel 33 Mapping Register
02A0 0188	DCHMAP34	DMA Channel 34 Mapping Register
02A0 018C	DCHMAP35	DMA Channel 35 Mapping Register
02A0 0190	DCHMAP36	DMA Channel 36 Mapping Register
02A0 0194	DCHMAP37	DMA Channel 37 Mapping Register
02A0 0198	DCHMAP38	DMA Channel 38 Mapping Register
02A0 019C	DCHMAP39	DMA Channel 39 Mapping Register
02A0 01A0	DCHMAP40	DMA Channel 40 Mapping Register
02A0 01A4	DCHMAP41	DMA Channel 41 Mapping Register
02A0 01A8	DCHMAP42	DMA Channel 42 Mapping Register
02A0 01AC	DCHMAP43	DMA Channel 43 Mapping Register
02A0 01B0	DCHMAP44	DMA Channel 44 Mapping Register
02A0 01B4	DCHMAP45	DMA Channel 45 Mapping Register
02A0 01B8	DCHMAP46	DMA Channel 46 Mapping Register
02A0 01BC	DCHMAP47	DMA Channel 47 Mapping Register
02A0 01C0	DCHMAP48	DMA Channel 48 Mapping Register
02A0 01C4	DCHMAP49	DMA Channel 49 Mapping Register
02A0 01C8	DCHMAP50	DMA Channel 50 Mapping Register
02A0 01CC	DCHMAP51	DMA Channel 51 Mapping Register
02A0 01D0	DCHMAP52	DMA Channel 52 Mapping Register
02A0 01D4	DCHMAP53	DMA Channel 53 Mapping Register
02A0 01D8	DCHMAP54	DMA Channel 54 Mapping Register
02A0 01DC	DCHMAP55	DMA Channel 55 Mapping Register
02A0 01E0	DCHMAP56	DMA Channel 56 Mapping Register
02A0 01E4	DCHMAP57	DMA Channel 57 Mapping Register
02A0 01E8	DCHMAP58	DMA Channel 58 Mapping Register
02A0 01EC	DCHMAP59	DMA Channel 59 Mapping Register
02A0 01F0	DCHMAP60	DMA Channel 60 Mapping Register
02A0 01F4	DCHMAP61	DMA Channel 61 Mapping Register
02A0 01F8	DCHMAP62	DMA Channel 62 Mapping Register
02A0 01FC	DCHMAP63	DMA Channel 63 Mapping Register
02A0 0200	QCHMAP0	QDMA Channel 0 Mapping Register
02A0 0204	QCHMAP1	QDMA Channel 1 Mapping Register
02A0 0208	QCHMAP2	QDMA Channel 2 Mapping Register
02A0 020C	QCHMAP3	QDMA Channel 3 Mapping Register
02A0 0210 - 02A0 021C	-	Reserved

 Copyright © 2006–2012, Texas Instruments Incorporated

Table 7-4. EDMA3 Channel Controller Registers (continued)

HEX ADDRESS RANGE	ACRONYM	REGISTER NAME
02A0 0220 - 02A0 023C	-	Reserved
02A0 0240	DMAQNUM0	DMA Queue Number Register 0
02A0 0244	DMAQNUM1	DMA Queue Number Register 1
02A0 0248	DMAQNUM2	DMA Queue Number Register 2
02A0 024C	DMAQNUM3	DMA Queue Number Register 3
02A0 0250	DMAQNUM4	DMA Queue Number Register 4
02A0 0254	DMAQNUM5	DMA Queue Number Register 5
02A0 0258	DMAQNUM6	DMA Queue Number Register 6
02A0 025C	DMAQNUM7	DMA Queue Number Register 7
02A0 0260	QDMAQNUM	QDMA Queue Number Register
02A0 0264 - 02A0 0280	-	Reserved
02A0 0284	QUEPRI	Queue Priority Register
02A0 0288 - 02A0 02FC	-	Reserved
02A0 0300	EMR	Event Missed Register
02A0 0304	EMRH	Event MissedRegister High
02A0 0308	EMCR	Event Missed Clear Register
02A0 030C	EMCRH	Event Missed Clear Register High
02A0 0310	QEMR	QDMA Event Missed Register
02A0 0314	QEMCR	QDMA Event Missed Clear Register
02A0 0318	CCERR	EDMA3CC Error Register
02A0 031C	CCERRCLR	EDMA3CC Error Clear Register
02A0 0320	EEVAL	Error Evaluate Register
02A0 0324 - 02A0 033C	-	Reserved
02A0 0340	DRAE0	DMA Region Access Enable Register for Region 0
02A0 0344	DRAEH0	DMA Region Access Enable Register High for Region 0
02A0 0348	DRAE1	DMA Region Access Enable Register for Region 1
02A0 034C	DRAEH1	DMA Region Access Enable Register High for Region 1
02A0 0350	DRAE2	DMA Region Access Enable Register for Region 2
02A0 0354	DRAEH2	DMA Region Access Enable Register High for Region 2
02A0 0358	DRAE3	DMA Region Access Enable Register for Region 3
02A0 035C	DRAEH3	DMA Region Access Enable Register High for Region 3
02A0 0360	DRAE4	DMA Region Access Enable Register for Region 4
02A0 0364	DRAEH4	DMA Region Access Enable Register High for Region 4
02A0 0368	DRAE5	DMA Region Access Enable Register for Region 5
02A0 036C	DRAEH5	DMA Region Access Enable Register High for Region 5
02A0 0370	DRAE6	DMA Region Access Enable Register for Region 6
02A0 0374	DRAEH6	DMA Region Access Enable Register High for Region 6
02A0 0378	DRAE7	DMA Region Access Enable Register for Region 7
02A0 037C	DRAEH7	DMA Region Access Enable Register High for Region 7
02A0 0380	QRAE0	QDMA Region Access Enable Register for Region 0
02A0 0384	QRAE1	QDMA Region Access Enable Register for Region 1
02A0 0388	QRAE2	QDMA Region Access Enable Register for Region 2
02A0 038C	QRAE3	QDMA Region Access Enable Register for Region 3
02A0 0390 - 02A0 039C	-	Reserved
02A0 0400	Q0E0	Event Queue 0 Entry Register 0
02A0 0404	Q0E1	Event Queue 0 Entry Register 1
02A0 0408	Q0E2	Event Queue 0 Entry Register 2

Table 7-4. EDMA3 Channel Controller Registers (continued)

HEX ADDRESS RANGE	ACRONYM	REGISTER NAME
02A0 040C	Q0E3	Event Queue 0 Entry Register 3
02A0 0410	Q0E4	Event Queue 0 Entry Register 4
02A0 0414	Q0E5	Event Queue 0 Entry Register 5
02A0 0418	Q0E6	Event Queue 0 Entry Register 6
02A0 041C	Q0E7	Event Queue 0 Entry Register 7
02A0 0420	Q0E8	Event Queue 0 Entry Register 8
02A0 0424	Q0E9	Event Queue 0 Entry Register 9
02A0 0428	Q0E10	Event Queue 0 Entry Register 10
02A0 042C	Q0E11	Event Queue 0 Entry Register 11
02A0 0430	Q0E12	Event Queue 0 Entry Register 12
02A0 0434	Q0E13	Event Queue 0 Entry Register 13
02A0 0438	Q0E14	Event Queue 0 Entry Register 14
02A0 043C	Q0E15	Event Queue 0 Entry Register 15
02A0 0440	Q1E0	Event Queue 1 Entry Register 0
02A0 0444	Q1E1	Event Queue 1 Entry Register 1
02A0 0448	Q1E2	Event Queue 1 Entry Register 2
02A0 044C	Q1E3	Event Queue 1 Entry Register 3
02A0 0450	Q1E4	Event Queue 1 Entry Register 4
02A0 0454	Q1E5	Event Queue 1 Entry Register 5
02A0 0458	Q1E6	Event Queue 1 Entry Register 6
02A0 045C	Q1E7	Event Queue 1 Entry Register 7
02A0 0460	Q1E8	Event Queue 1 Entry Register 8
02A0 0464	Q1E9	Event Queue 1 Entry Register 9
02A0 0468	Q1E10	Event Queue 1 Entry Register 10
02A0 046C	Q1E11	Event Queue 1 Entry Register 11
02A0 0470	Q1E12	Event Queue 1 Entry Register 12
02A0 0474	Q1E13	Event Queue 1 Entry Register 13
02A0 0478	Q1E14	Event Queue 1 Entry Register 14
02A0 047C	Q1E15	Event Queue 1 Entry Register 15
02A0 0480	Q2E0	Event Queue 2 Entry Register 0
02A0 0484	Q2E1	Event Queue 2 Entry Register 1
02A0 0488	Q2E2	Event Queue 2 Entry Register 2
02A0 048C	Q2E3	Event Queue 2 Entry Register 3
02A0 0490	Q2E4	Event Queue 2 Entry Register 4
02A0 0494	Q2E5	Event Queue 2 Entry Register 5
02A0 0498	Q2E6	Event Queue 2 Entry Register 6
02A0 049C	Q2E7	Event Queue 2 Entry Register 7
02A0 04A0	Q2E8	Event Queue 2 Entry Register 8
02A0 04A4	Q2E9	Event Queue 2 Entry Register 9
02A0 04A8	Q2E10	Event Queue 2 Entry Register 10
02A0 04AC	Q2E11	Event Queue 2 Entry Register 11
02A0 04B0	Q2E12	Event Queue 2 Entry Register 12
02A0 04B4	Q2E13	Event Queue 2 Entry Register 13
02A0 04B8	Q2E14	Event Queue 2 Entry Register 14
02A0 04BC	Q2E15	Event Queue 2 Entry Register 15
02A0 04C0	Q3E0	Event Queue 3 Entry Register 0
02A0 04C4	Q3E1	Event Queue 3 Entry Register 1

Copyright © 2006–2012, Texas Instruments Incorporated

Table 7-4. EDMA3 Channel Controller Registers (continued)

HEX ADDRESS RANGE	ACRONYM	REGISTER NAME
02A0 04C8	Q3E2	Event Queue 3 Entry Register 2
02A0 04CC	Q3E3	Event Queue 3 Entry Register 3
02A0 04D0	Q3E4	Event Queue 3 Entry Register 4
02A0 04D4	Q3E5	Event Queue 3 Entry Register 5
02A0 04D8	Q3E6	Event Queue 3 Entry Register 6
02A0 04DC	Q3E7	Event Queue 3 Entry Register 7
02A0 04E0	Q3E8	Event Queue 3 Entry Register 8
02A0 04E4	Q3E9	Event Queue 3 Entry Register 9
02A0 04E8	Q3E10	Event Queue 3 Entry Register 10
02A0 04EC	Q3E11	Event Queue 3 Entry Register 11
02A0 04F0	Q3E12	Event Queue 3 Entry Register 12
02A0 04F4	Q3E13	Event Queue 3 Entry Register 13
02A0 04F8	Q3E14	Event Queue 3 Entry Register 14
02A0 04FC	Q3E15	Event Queue 3 Entry Register 15
02A0 0500 - 02A0 051C	-	Reserved
02A0 0520 - 02A0 05FC	-	Reserved
02A0 0600	QSTAT0	Queue Status Register 0
02A0 0604	QSTAT1	Queue Status Register 1
02A0 0608	QSTAT2	Queue Status Register 2
02A0 060C	QSTAT3	Queue Status Register 3
02A0 0610 - 02A0 061C	-	Reserved
02A0 0620	QWMTHRA	Queue Watermark Threshold A Register
02A0 0624 - 02A0 063C	-	Reserved
02A0 0640	CCSTAT	EDMA3CC Status Register
02A0 0644 - 02A0 06FC	-	Reserved
02A0 0700 - 02A0 07FC	-	Reserved
02A0 0800	MPFAR	Memory Protection Fault Address Register
02A0 0804	MPFSR	Memory Protection Fault Status Register
02A0 0808	MPFCR	Memory Protection Fault Command Register
02A0 080C	MPPA0	Memory Protection Page Attribute Register 0
02A0 0810	MPPA1	Memory Protection Page Attribute Register 1
02A0 0814	MPPA2	Memory Protection Page Attribute Register 2
02A0 0818	MPPA3	Memory Protection Page Attribute Register 3
02A0 081C	MPPA4	Memory Protection Page Attribute Register 4
02A0 0820	MPPA5	Memory Protection Page Attribute Register 5
02A0 0824	MPPA6	Memory Protection Page Attribute Register 6
02A0 0828	MPPA7	Memory Protection Page Attribute Register 7
02A0 082C - 02A0 0FFC	-	Reserved
02A0 1000	ER	Event Register
02A0 1004	ERH	Event Register High
02A0 1008	ECR	Event Clear Register
02A0 100C	ECRH	Event Clear Register High
02A0 1010	ESR	Event Set Register
02A0 1014	ESRH	Event Set Register High
02A0 1018	CER	Chained Event Register
02A0 101C	CERH	Chained Event Register High
02A0 1020	EER	Event Enable Register

Copyright © 2006–2012, Texas Instruments Incorporated

Table 7-4. EDMA3 Channel Controller Registers (continued)

HEX ADDRESS RANGE	ACRONYM	REGISTER NAME
02A0 1024	EERH	Event Enable Register High
02A0 1028	EECR	Event Enable Clear Register
02A0 102C	EECRH	Event Enable Clear Register High
02A0 1030	EESR	Event Enable Set Register
02A0 1034	EESRH	Event Enable Set Register High
02A0 1038	SER	Secondary Event Register
02A0 103C	SERH	Secondary Event Register High
02A0 1040	SECR	Secondary Event Clear Register
02A0 1044	SECRH	Secondary Event Clear Register High
02A0 1048 - 02A0 104C	-	Reserved
02A0 1050	IER	Interrupt Enable Register
02A0 1054	IERH	Interrupt Enable High Register
02A0 1058	IECR	Interrupt Enable Clear Register
02A0 105C	IECRH	Interrupt Enable Clear High Register
02A0 1060	IESR	Interrupt Enable Set Register
02A0 1064	IESRH	Interrupt Enable Set High Register
02A0 1068	IPR	Interrupt Pending Register
02A0 106C	IPRH	Interrupt Pending High Register
02A0 1070	ICR	Interrupt Clear Register
02A0 1074	ICRH	Interrupt Clear High Register
02A0 1078	IEVAL	Interrupt Evaluate Register
02A0 107C	-	Reserved
02A0 1080	QER	QDMA Event Register
02A0 1084	QEER	QDMA Event Enable Register
02A0 1088	QEECR	QDMA Event Enable Clear Register
02A0 108C	QEESR	QDMA Event Enable Set Register
02A0 1090	QSER	QDMA Secondary Event Register
02A0 1094	QSECR	QDMA Secondary Event Clear Register
02A0 1098 - 02A0 1FFF	-	Reserved
Shadow Region 0 Channel Registers		
02A0 2000	ER	Event Register
02A0 2004	ERH	Event Register High
02A0 2008	ECR	Event Clear Register
02A0 200C	ECRH	Event Clear Register High
02A0 2010	ESR	Event Set Register
02A0 2014	ESRH	Event Set Register High
02A0 2018	CER	Chained Event Register
02A0 201C	CERH	Chained Event Register Hig
02A0 2020	EER	Event Enable Register
02A0 2024	EERH	Event Enable Register High
02A0 2028	EECR	Event Enable Clear Register
02A0 202C	EECRH	Event Enable Clear Register High
02A0 2030	EESR	Event Enable Set Register
02A0 2034	EESRH	Event Enable Set Register High
02A0 2038	SER	Secondary Event Register
02A0 203C	SERH	Secondary Event Register High
02A0 2040	SECR	Secondary Event Clear Register

Copyright © 2006–2012, Texas Instruments Incorporated

Table 7-4. EDMA3 Channel Controller Registers (continued)

HEX ADDRESS RANGE	ACRONYM	REGISTER NAME
02A0 2044	SECRH	Secondary Event Clear Register High
02A0 2048 - 02A0 204C	-	Reserved
02A0 2050	IER	Interrupt Enable Register
02A0 2054	IERH	Interrupt Enable Register High
02A0 2058	IECR	Interrupt Enable Clear Register
02A0 205C	IECRH	Interrupt Enable Clear Register High
02A0 2060	IESR	Interrupt Enable Set Register
02A0 2064	IESRH	Interrupt Enable Set Register High
02A0 2068	IPR	Interrupt Pending Register
02A0 206C	IPRH	Interrupt Pending Register High
02A0 2070	ICR	Interrupt Clear Register
02A0 2074	ICRH	Interrupt Clear Register High
02A0 2078	IEVAL	Interrupt Evaluate Register
02A0 207C	-	Reserved
02A0 2080	QER	QDMA Event Register
02A0 2084	QEER	QDMA Event Enable Register
02A0 2088	QEECR	QDMA Event Enable Clear Register
02A0 208C	QEESR	QDMA Event Enable Set Register
02A0 2090	QSER	QDMA Secondary Event Register
02A0 2094	QSECR	QDMA Secondary Event Clear Register
02A0 2098 - 02A0 23FF	-	Reserved
02A0 2400 - 02A0 2497	-	Shadow Region 2 Channel Registers
02A0 2498 - 02A0 25FF	-	Reserved
02A0 2600 - 02A0 2697	-	Shadow Region 3 Channel Registers
02A0 2698 - 02A0 27FF	-	Reserved
02A0 2800 - 02A0 2897	-	Shadow Region 4 Channel Registers
02A0 2898 - 02A0 29FF	-	Reserved
02A0 2A00 - 02A0 2A97	-	Shadow Region 5 Channel Registers
02A0 2A98 - 02A0 2BFF	-	Reserved
02A0 2C00 - 02A0 2C97	-	Shadow Region 6 Channel Registers
02A0 2C98 - 02A0 2DFF	-	Reserved
02A0 2E00 - 02A0 2E97	-	Shadow Region 7 Channel Registers
02A0 2E98 - 02A0 2FFF	-	Reserved

Table 7-5. EDMA3 Parameter RAM(1)

HEX ADDRESS RANGE	ACRONYM	REGISTER NAME
02A0 4000 - 02A0 401F	-	Parameter Set 0
02A0 4020 - 02A0 403F	-	Parameter Set 1
02A0 4040 - 02A0 405F	-	Parameter Set 2
02A0 4060 - 02A0 407F	-	Parameter Set 3
02A0 4080 - 02A0 409F	-	Parameter Set 4
02A0 40A0 - 02A0 40BF	-	Parameter Set 5
02A0 40C0 - 02A0 40DF	-	Parameter Set 6
02A0 40E0 - 02A0 40FF	-	Parameter Set 7
02A0 4100 - 02A0 411F	-	Parameter Set 8

(1) The C6454 device has 256 EDMA3 parameter sets total. Each parameter set can be used as a DMA entry, a QDMA entry, or a link entry.

Copyright © 2006–2012, Texas Instruments Incorporated

Table 7-5. EDMA3 Parameter RAM[1] (continued)

HEX ADDRESS RANGE	ACRONYM	REGISTER NAME
02A0 4120 - 02A0 413F	-	Parameter Set 9
...		...
02A0 47E0 - 02A0 47FF	-	Parameter Set 63
02A0 4800 - 02A0 481F	-	Parameter Set 64
02A0 4820 - 02A0 483F	-	Parameter Set 65
...		...
02A0 5FC0 - 02A0 5FDF	-	Parameter Set 254
02A0 5FE0 - 02A0 5FFF	-	Parameter Set 255

Table 7-6. EDMA3 Transfer Controller 0 Registers

HEX ADDRESS RANGE	ACRONYM	REGISTER NAME
02A2 0000	PID	Peripheral Identification Register
02A2 0004	TCCFG	EDMA3TC Configuration Register
02A2 0008 - 02A2 00FC	-	Reserved
02A2 0100	TCSTAT	EDMA3TC Channel Status Register
02A2 0104 - 02A2 011C	-	Reserved
02A2 0120	ERRSTAT	Error Register
02A2 0124	ERREN	Error Enable Register
02A2 0128	ERRCLR	Error Clear Register
02A2 012C	ERRDET	Error Details Register
02A2 0130	ERRCMD	Error Interrupt Command Register
02A2 0134 - 02A2 013C	-	Reserved
02A2 0140	RDRATE	Read Rate Register
02A2 0144 - 02A2 023C	-	Reserved
02A2 0240	SAOPT	Source Active Options Register
02A2 0244	SASRC	Source Active Source Address Register
02A2 0248	SACNT	Source Active Count Register
02A2 024C	SADST	Source Active Destination Address Register
02A2 0250	SABIDX	Source Active Source B-Index Register
02A2 0254	SAMPPRXY	Source Active Memory Protection Proxy Register
02A2 0258	SACNTRLD	Source Active Count Reload Register
02A2 025C	SASRCBREF	Source Active Source Address B-Reference Register
02A2 0260	SADSTBREF	Source Active Destination Address B-Reference Register
02A2 0264 - 02A2 027C	-	Reserved
02A2 0280	DFCNTRLD	Destination FIFO Set Count Reload
02A2 0284	DFSRCBREF	Destination FIFO Set Destination Address B Reference Register
02A2 0288	DFDSTBREF	Destination FIFO Set Destination Address B Reference Register
02A2 028C - 02A2 02FC	-	Reserved
02A2 0300	DFOPT0	Destination FIFO Options Register 0
02A2 0304	DFSRC0	Destination FIFO Source Address Register 0
02A2 0308	DFCNT0	Destination FIFO Count Register 0
02A2 030C	DFDST0	Destination FIFO Destination Address Register 0
02A2 0310	DFBIDX0	Destination FIFO BIDX Register 0
02A2 0314	DFMPPRXY0	Destination FIFO Memory Protection Proxy Register 0
02A2 0318 - 02A2 033C	-	Reserved
02A2 0340	DFOPT1	Destination FIFO Options Register 1
02A2 0344	DFSRC1	Destination FIFO Source Address Register 1

Copyright © 2006–2012, Texas Instruments Incorporated

Table 7-6. EDMA3 Transfer Controller 0 Registers (continued)

HEX ADDRESS RANGE	ACRONYM	REGISTER NAME
02A2 0348	DFCNT1	Destination FIFO Count Register 1
02A2 034C	DFDST1	Destination FIFO Destination Address Register 1
02A2 0350	DFBIDX1	Destination FIFO BIDX Register 1
02A2 0354	DFMPPRXY1	Destination FIFO Memory Protection Proxy Register 1
02A2 0358 - 02A2 037C	-	Reserved
02A2 0380	DFOPT2	Destination FIFO Options Register 2
02A2 0384	DFSRC2	Destination FIFO Source Address Register 2
02A2 0388	DFCNT2	Destination FIFO Count Register 2
02A2 038C	DFDST2	Destination FIFO Destination Address Register 2
02A2 0390	DFBIDX2	Destination FIFO BIDX Register 2
02A2 0394	DFMPPRXY2	Destination FIFO Memory Protection Proxy Register 2
02A2 0398 - 02A2 03BC	-	Reserved
02A2 03C0	DFOPT3	Destination FIFO Options Register 3
02A2 03C4	DFSRC3	Destination FIFO Source Address Register 3
02A2 03C8	DFCNT3	Destination FIFO Count Register 3
02A2 03CC	DFDST3	Destination FIFO Destination Address Register 3
02A2 03D0	DFBIDX3	Destination FIFO BIDX Register 3
02A2 03D4	DFMPPRXY3	Destination FIFO Memory Protection Proxy Register 3
02A2 03D8 - 02A2 7FFF	-	Reserved

Table 7-7. EDMA3 Transfer Controller 1 Registers

HEX ADDRESS RANGE	ACRONYM	REGISTER NAME
02A2 8000	PID	Peripheral Identification Register
02A2 8004	TCCFG	EDMA3TC Configuration Register
02A2 8008 - 02A2 80FC	-	Reserved
02A2 8100	TCSTAT	EDMA3TC Channel Status Register
02A2 8104 - 02A2 811C	-	Reserved
02A2 8120	ERRSTAT	Error Register
02A2 8124	ERREN	Error Enable Register
02A2 8128	ERRCLR	Error Clear Register
02A2 812C	ERRDET	Error Details Register
02A2 8130	ERRCMD	Error Interrupt Command Register
02A2 8134 - 02A2 813C	-	Reserved
02A2 8140	RDRATE	Read Rate Register
02A2 8144 - 02A2 823C	-	Reserved
02A2 8240	SAOPT	Source Active Options Register
02A2 8244	SASRC	Source Active Source Address Register
02A2 8248	SACNT	Source Active Count Register
02A2 824C	SADST	Source Active Destination Address Register
02A2 8250	SABIDX	Source Active Source B-Index Register
02A2 8254	SAMPPRXY	Source Active Memory Protection Proxy Register
02A2 8258	SACNTRLD	Source Active Count Reload Register
02A2 825C	SASRCBREF	Source Active Source Address B-Reference Register
02A2 8260	SADSTBREF	Source Active Destination Address B-Reference Register
02A2 8264 - 02A2 827C	-	Reserved
02A2 8280	DFCNTRLD	Destination FIFO Set Count Reload
02A2 8284	DFSRCBREF	Destination FIFO Set Destination Address B Reference Register

Copyright © 2006–2012, Texas Instruments Incorporated

Table 7-7. EDMA3 Transfer Controller 1 Registers (continued)

HEX ADDRESS RANGE	ACRONYM	REGISTER NAME
02A2 8288	DFDSTBREF	Destination FIFO Set Destination Address B Reference Register
02A2 828C - 02A2 82FC	-	Reserved
02A2 8300	DFOPT0	Destination FIFO Options Register 0
02A2 8304	DFSRC0	Destination FIFO Source Address Register 0
02A2 8308	DFCNT0	Destination FIFO Count Register 0
02A2 830C	DFDST0	Destination FIFO Destination Address Register 0
02A2 8310	DFBIDX0	Destination FIFO BIDX Register 0
02A2 8314	DFMPPRXY0	Destination FIFO Memory Protection Proxy Register 0
02A2 8318 - 02A2 833C	-	Reserved
02A2 8340	DFOPT1	Destination FIFO Options Register 1
02A2 8344	DFSRC1	Destination FIFO Source Address Register 1
02A2 8348	DFCNT1	Destination FIFO Count Register 1
02A2 834C	DFDST1	Destination FIFO Destination Address Register 1
02A2 8350	DFBIDX1	Destination FIFO BIDX Register 1
02A2 8354	DFMPPRXY1	Destination FIFO Memory Protection Proxy Register 1
02A2 8358 - 02A2 837C	-	Reserved
02A2 8380	DFOPT2	Destination FIFO Options Register 2
02A2 8384	DFSRC2	Destination FIFO Source Address Register 2
02A2 8388	DFCNT2	Destination FIFO Count Register 2
02A2 838C	DFDST2	Destination FIFO Destination Address Register 2
02A2 8390	DFBIDX2	Destination FIFO BIDX Register 2
02A2 8394	DFMPPRXY2	Destination FIFO Memory Protection Proxy Register 2
02A2 8398 - 02A2 83BC	-	Reserved
02A2 83C0	DFOPT3	Destination FIFO Options Register 3
02A2 83C4	DFSRC3	Destination FIFO Source Address Register 3
02A2 83C8	DFCNT3	Destination FIFO Count Register 3
02A2 83CC	DFDST3	Destination FIFO Destination Address Register 3
02A2 83D0	DFBIDX3	Destination FIFO BIDX Register 3
02A2 83D4	DFMPPRXY3	Destination FIFO Memory Protection Proxy Register 3
02A2 83D8 - 02A2 FFFF	-	Reserved

Table 7-8. EDMA3 Transfer Controller 2 Registers

HEX ADDRESS RANGE	ACRONYM	REGISTER NAME
02A3 0000	PID	Peripheral Identification Register
02A3 0004	TCCFG	EDMA3TC Configuration Register
02A3 0008 - 02A3 00FC	-	Reserved
02A3 0100	TCSTAT	EDMA3TC Channel Status Register
02A3 0104 - 02A3 011C	-	Reserved
02A3 0120	ERRSTAT	Error Register
02A3 0124	ERREN	Error Enable Register
02A3 0128	ERRCLR	Error Clear Register
02A3 012C	ERRDET	Error Details Register
02A3 0130	ERRCMD	Error Interrupt Command Register
02A3 0134 - 02A3 013C	-	Reserved
02A3 0140	RDRATE	Read Rate Register
02A3 0144 - 02A3 023C	-	Reserved
02A3 0240	SAOPT	Source Active Options Register

 Copyright © 2006–2012, Texas Instruments Incorporated

Table 7-8. EDMA3 Transfer Controller 2 Registers (continued)

HEX ADDRESS RANGE	ACRONYM	REGISTER NAME
02A3 0244	SASRC	Source Active Source Address Register
02A3 0248	SACNT	Source Active Count Register
02A3 024C	SADST	Source Active Destination Address Register
02A3 0250	SABIDX	Source Active Source B-Index Register
02A3 0254	SAMPPRXY	Source Active Memory Protection Proxy Register
02A3 0258	SACNTRLD	Source Active Count Reload Register
02A3 025C	SASRCBREF	Source Active Source Address B-Reference Register
02A3 0260	SADSTBREF	Source Active Destination Address B-Reference Register
02A3 0264 - 02A3 027C	-	Reserved
02A3 0280	DFCNTRLD	Destination FIFO Set Count Reload
02A3 0284	DFSRCBREF	Destination FIFO Set Destination Address B Reference Register
02A3 0288	DFDSTBREF	Destination FIFO Set Destination Address B Reference Register
02A3 028C - 02A3 02FC	-	Reserved
02A3 0300	DFOPT0	Destination FIFO Options Register 0
02A3 0304	DFSRC0	Destination FIFO Source Address Register 0
02A3 0308	DFCNT0	Destination FIFO Count Register 0
02A3 030C	DFDST0	Destination FIFO Destination Address Register 0
02A3 0310	DFBIDX0	Destination FIFO BIDX Register 0
02A3 0314	DFMPPRXY0	Destination FIFO Memory Protection Proxy Register 0
02A3 0318 - 02A3 033C	-	Reserved
02A3 0340	DFOPT1	Destination FIFO Options Register 1
02A3 0344	DFSRC1	Destination FIFO Source Address Register 1
02A3 0348	DFCNT1	Destination FIFO Count Register 1
02A3 034C	DFDST1	Destination FIFO Destination Address Register 1
02A3 0350	DFBIDX1	Destination FIFO BIDX Register 1
02A3 0354	DFMPPRXY1	Destination FIFO Memory Protection Proxy Register 1
02A3 0358 - 02A3 037C	-	Reserved
02A3 0380	DFOPT2	Destination FIFO Options Register 2
02A3 0384	DFSRC2	Destination FIFO Source Address Register 2
02A3 0388	DFCNT2	Destination FIFO Count Register 2
02A3 038C	DFDST2	Destination FIFO Destination Address Register 2
02A3 0390	DFBIDX2	Destination FIFO BIDX Register 2
02A3 0394	DFMPPRXY2	Destination FIFO Memory Protection Proxy Register 2
02A3 0398 - 02A3 03BC	-	Reserved
02A3 03C0	DFOPT3	Destination FIFO Options Register 3
02A3 03C4	DFSRC3	Destination FIFO Source Address Register 3
02A3 03C8	DFCNT3	Destination FIFO Count Register 3
02A3 03CC	DFDST3	Destination FIFO Destination Address Register 3
02A3 03D0	DFBIDX3	Destination FIFO BIDX Register 3
02A3 03D4	DFMPPRXY3	Destination FIFO Memory Protection Proxy Register 3
02A3 03D8 - 02A3 7FFF	-	Reserved

Table 7-9. EDMA3 Transfer Controller 3 Registers

HEX ADDRESS RANGE	ACRONYM	REGISTER NAME
02A3 8000	PID	Peripheral Identification Register
02A3 8004	TCCFG	EDMA3TC Configuration Register
02A3 8008 - 02A3 80FC	-	Reserved

Copyright © 2006–2012, Texas Instruments Incorporated

Table 7-9. EDMA3 Transfer Controller 3 Registers (continued)

HEX ADDRESS RANGE	ACRONYM	REGISTER NAME
02A3 8100	TCSTAT	EDMA3TC Channel Status Register
02A3 8104 - 02A3 811C	-	Reserved
02A3 8120	ERRSTAT	Error Register
02A3 8124	ERREN	Error Enable Register
02A3 8128	ERRCLR	Error Clear Register
02A3 812C	ERRDET	Error Details Register
02A3 8130	ERRCMD	Error Interrupt Command Register
02A3 8134 - 02A3 813C	-	Reserved
02A3 8140	RDRATE	Read Rate Register
02A3 8144 - 02A3 823C	-	Reserved
02A3 8240	SAOPT	Source Active Options Register
02A3 8244	SASRC	Source Active Source Address Register
02A3 8248	SACNT	Source Active Count Register
02A3 824C	SADST	Source Active Destination Address Register
02A3 8250	SABIDX	Source Active Source B-Index Register
02A3 8254	SAMPPRXY	Source Active Memory Protection Proxy Register
02A3 8258	SACNTRLD	Source Active Count Reload Register
02A3 825C	SASRCBREF	Source Active Source Address B-Reference Register
02A3 8260	SADSTBREF	Source Active Destination Address B-Reference Register
02A3 8264 - 02A3 827C	-	Reserved
02A3 8280	DFCNTRLD	Destination FIFO Set Count Reload
02A3 8284	DFSRCBREF	Destination FIFO Set Destination Address B Reference Register
02A3 8288	DFDSTBREF	Destination FIFO Set Destination Address B Reference Register
02A3 828C - 02A3 82FC	-	Reserved
02A3 8300	DFOPT0	Destination FIFO Options Register 0
02A3 8304	DFSRC0	Destination FIFO Source Address Register 0
02A3 8308	DFCNT0	Destination FIFO Count Register 0
02A3 830C	DFDST0	Destination FIFO Destination Address Register 0
02A3 8310	DFBIDX0	Destination FIFO BIDX Register 0
02A3 8314	DFMPPRXY0	Destination FIFO Memory Protection Proxy Register 0
02A3 8318 - 02A3 833C	-	Reserved
02A3 8340	DFOPT1	Destination FIFO Options Register 1
02A3 8344	DFSRC1	Destination FIFO Source Address Register 1
02A3 8348	DFCNT1	Destination FIFO Count Register 1
02A3 834C	DFDST1	Destination FIFO Destination Address Register 1
02A3 8350	DFBIDX1	Destination FIFO BIDX Register 1
02A3 8354	DFMPPRXY1	Destination FIFO Memory Protection Proxy Register 1
02A3 8358 - 02A3 837C	-	Reserved
02A3 8380	DFOPT2	Destination FIFO Options Register 2
02A3 8384	DFSRC2	Destination FIFO Source Address Register 2
02A3 8388	DFCNT2	Destination FIFO Count Register 2
02A3 838C	DFDST2	Destination FIFO Destination Address Register 2
02A3 8390	DFBIDX2	Destination FIFO BIDX Register 2
02A3 8394	DFMPPRXY2	Destination FIFO Memory Protection Proxy Register 2
02A3 8398 - 02A3 83BC	-	Reserved
02A3 83C0	DFOPT3	Destination FIFO Options Register 3
02A3 83C4	DFSRC3	Destination FIFO Source Address Register 3

 Copyright © 2006–2012, Texas Instruments Incorporated

Table 7-9. EDMA3 Transfer Controller 3 Registers (continued)

HEX ADDRESS RANGE	ACRONYM	REGISTER NAME
02A3 83C8	DFCNT3	Destination FIFO Count Register 3
02A3 83CC	DFDST3	Destination FIFO Destination Address Register 3
02A3 83D0	DFBIDX3	Destination FIFO BIDX Register 3
02A3 83D4	DFMPPRXY3	Destination FIFO Memory Protection Proxy Register 3
02A3 83D8 - 02A3 FFFF	-	Reserved

7.5 Interrupts

7.5.1 Interrupt Sources and Interrupt Controller

The CPU interrupts on the C6454 device are configured through the C64x+ Megamodule Interrupt Controller. The interrupt controller allows for up to 128 system events to be programmed to any of the twelve CPU interrupt inputs (CPUINT4 - CPUINT15), the CPU exception input (EXCEP), or the advanced emulation logic. The 128 system events consist of both internally-generated events (within the megamodule) and chip-level events. Table 7-10 shows the mapping of system events. For more information on the Interrupt Controller, see the *TMS320C64x+ Megamodule Reference Guide* (literature number SPRU871).

Table 7-10. C6454 System Event Mapping

EVENT NUMBER	INTERRUPT EVENT	DESCRIPTION
0 (1)	EVT0	Output of event combiner 0 in interrupt controller, for events 1 - 31.
1 (1)	EVT1	Output of event combiner 1 in interrupt controller, for events 32 - 63.
2 (1)	EVT2	Output of event combiner 2 in interrupt controller, for events 64 - 95.
3 (1)	EVT3	Output of event combiner 3 in interrupt controller, for events 96 - 127.
4 - 8	Reserved	Reserved. These system events are not connected and, therefore, not used.
9 (1)	EMU_DTDMA	EMU interrupt for: 1. Host scan access 2. DTDMA transfer complete 3. AET interrupt
10	None	This system event is not connected and, therefore, not used.
11 (1)	EMU_RTDXRX	EMU real-time data exchange (RTDX) receive complete
12 (1)	EMU_RTDXTX	EMU RTDX transmit complete
13 (1)	IDMA0	IDMA channel 0 interrupt
14 (1)	IDMA1	IDMA channel 1 interrupt
15	DSPINT	HPI/PCI-to-DSP interrupt
16	I2CINT	I2C interrupt
17	MACINT	Ethernet MAC interrupt
18	AEASYNCERR	EMIFA error interrupt
19 - 23	Reserved	Reserved. This system event is not connected and, therefore, not used.
24	EDMA3CC_GINT	EDMA3 channel global completion interrupt
25 - 39	Reserved	Reserved. These system events are not connected and, therefore, not used.
40	RINT0	McBSP0 receive interrupt
41	XINT0	McBSP0 transmit interrupt
42	RINT1	McBSP1 receive interrupt
43	XINT1	McBSP1 transmit interrupt
44 - 50	Reserved	Reserved. These system events are not connected and, therefore, not used.
51	GPINT0	GPIO interrupt
52	GPINT1	GPIO interrupt
53	GPINT2	GPIO interrupt
54	GPINT3	GPIO interrupt
55	GPINT4	GPIO interrupt
56	GPINT5	GPIO interrupt
57	GPINT6	GPIO interrupt

(1) This system event is generated from within the C64x+ megamodule.

 Copyright © 2006–2012, Texas Instruments Incorporated

Table 7-10. C6454 System Event Mapping (continued)

EVENT NUMBER	INTERRUPT EVENT	DESCRIPTION
58	GPINT7	GPIO interrupt
59	GPINT8	GPIO interrupt
60	GPINT9	GPIO interrupt
61	GPINT10	GPIO interrupt
62	GPINT11	GPIO interrupt
63	GPINT12	GPIO interrupt
64	GPINT13	GPIO interrupt
65	GPINT14	GPIO interrupt
66	GPINT15	GPIO interrupt
67	TINTLO0	Timer 0 lower counter interrupt
68	TINTHI0	Timer 0 higher counter interrupt
69	TINTLO1	Timer 1 lower counter interrupt
70	TINTHI1	Timer 1 higher counter interrupt
71	EDMA3CC_INT0	EDMA3CC completion interrupt - Mask0
72	EDMA3CC_INT1	EDMA3CC completion interrupt - Mask1
73	EDMA3CC_INT2	EDMA3CC completion interrupt - Mask2
74	EDMA3CC_INT3	EDMA3CC completion interrupt - Mask3
75	EDMA3CC_INT4	EDMA3CC completion interrupt - Mask4
76	EDMA3CC_INT5	EDMA3CC completion interrupt - Mask5
77	EDMA3CC_INT6	EDMA3CC completion interrupt - Mask6
78	EDMA3CC_INT7	EDMA3CC completion interrupt - Mask7
79	EDMA3CC_ERRINT	EDMA3CC error interrupt
80	Reserved	Reserved. This system event is not connected and, therefore, not used.
81	EDMA3TC0_ERRINT	EDMA3TC0 error interrupt
82	EDMA3TC1_ERRINT	EDMA3TC1 error interrupt
83	EDMA3TC2_ERRINT	EDMA3TC2 error interrupt
84	EDMA3TC3_ERRINT	EDMA3TC3 error interrupt
85 - 95	Reserved	Reserved. These system events are not connected and, therefore, not used.
96 (2)	INTERR	Interrupt Controller dropped CPU interrupt event
97 (2)	EMC_IDMAERR	EMC invalid IDMA parameters
98 - 99	Reserved	Reserved. These system events are not connected and, therefore, not used.
100 (2)	EFIINTA	EFI interrupt from side A
101 (2)	EFIINTB	EFI interrupt from side B
102 - 112	Reserved	Reserved. These system events are not connected and, therefore, not used.
113 (2)	L1P_ED1	L1P single bit error detected during DMA read
114 - 115	Reserved	Reserved. These system events are not connected and, therefore, not used.
116 (2)	L2_ED1	L2 single bit error detected
117 (2)	L2_ED2	L2 two bit error detected
118 (2)	PDC_INT	Powerdown sleep interrupt
119	Reserved	Reserved. This system event is not connected and, therefore, not used.
120 (2)	L1P_CMPA	L1P CPU memory protection fault
121 (2)	L1P_DMPA	L1P DMA memory protection fault

(2) This system event is generated from within the C64x+ megamodule.

Table 7-10. C6454 System Event Mapping (continued)

EVENT NUMBER	INTERRUPT EVENT	DESCRIPTION
122 (2)	L1D_CMPA	L1D CPU memory protection fault
123 (2)	L1D_DMPA	L1D DMA memory protection fault
124 (2)	L2_CMPA	L2 CPU memory protection fault
125 (2)	L2_DMPA	L2 DMA memory protection fault
126 (2)	IDMA_CMPA	IDMA CPU memory protection fault
127 (2)	IDMA_BUSERR	IDMA bus error interrupt

Copyright © 2006–2012, Texas Instruments Incorporated

7.5.2 External Interrupts Electrical Data/Timing

Table 7-11. Timing Requirements for External Interrupts[(1)]

(see Figure 7-6)

NO.			-720 -850 A-1000/-1000		UNIT
			MIN	MAX	
1	$t_{w(NMIL)}$	Width of the NMI interrupt pulse low	6P		ns
2	$t_{w(NMIH)}$	Width of the NMI interrupt pulse high	6P		ns

(1) P = 1/CPU clock frequency in ns. For example, when running parts at 1000 MHz, use P = 1 ns.

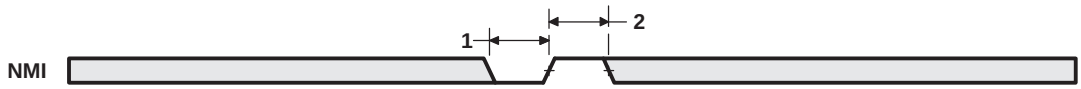

Figure 7-6. NMI Interrupt Timing

7.6 Reset Controller

The reset controller detects the different type of resets supported on the C6454 device and manages the distribution of those resets throughout the device.

The C6454 device has several types of resets: power-on reset, warm reset, system reset, and CPU reset. Table 7-12 explains further the types of reset, the reset initiator, and the effects of each reset on the chip. For more information on the effects of each reset on the PLL controllers and their clocks, see Section 7.6.7, *Reset Electrical Data/Timing*.

Table 7-12. Reset Types

TYPE	INITIATOR	EFFECT(s)
Power-on Reset	$\overline{\text{POR}}$ pin	Resets the entire chip including the test and emulation logic.
Warm Reset	$\overline{\text{RESET}}$ pin	Resets everything except for the test and emulation logic and PLL2. Emulator stays alive during Warm Reset.
System Reset	Emulator	A system reset maintains memory contents and does not reset the test and emulation circuitry. The device configuration pins are also not re-latched and the state of the peripherals is also not affected.(1)
CPU Local Reset	HPI/PCI	CPU local reset.

(1) On the C6454 device, peripherals can be in one of several states. These states are listed in Table 3-4.

7.6.1 Power-on Reset ($\overline{\text{POR}}$ Pin)

Power-on Reset is initiated by the $\overline{\text{POR}}$ pin and is used to reset the entire chip, including the test and emulation logic. Power-on Reset is also referred to as a cold reset since the device usually goes through a power-up cycle. During power-up, the $\overline{\text{POR}}$ pin must be asserted (driven low) until the power supplies have reached their normal operating conditions. Note that a device power-up cycle is not required to initiate a Power-on Reset.

The following sequence must be followed during a Power-on Reset:

1. Wait for all power supplies to reach normal operating conditions while keeping the $\overline{\text{POR}}$ pin asserted (driven low).

   While $\overline{\text{POR}}$ is asserted, all pins will be set to high-impedance. After the $\overline{\text{POR}}$ pin is deasserted (driven high), all Z group pins, low group pins, and high group pins are set to their reset state and will remain at their reset state until the otherwise configured by their respective peripheral. All peripherals, except those selected for boot purposes, are disabled after a Power-on Reset and must be enabled through the Device State Control registers; for more details, see Section 3.3, *Peripheral Selection After Device Reset*.
2. Once all the power supplies are within valid operating conditions, the $\overline{\text{POR}}$ pin must remain asserted (low) for a minimum of 256 CLKIN2 cycles. The PLL1 controller input clock, CLKIN1, and the PCI input clock, PCLK, must also be valid during this time. PCLK is only needed if the PCI module is being used. If the DDR2 memory controller and the EMAC peripheral are not needed, CLKIN2 can be tied low and, in this case, the $\overline{\text{POR}}$ pin must remain asserted (low) for a minimum of 256 CLKIN1 cycles after all power supplies have reached valid operating conditions.

   Within the low period of the $\overline{\text{POR}}$ pin, the following happens:
   - The reset signals flow to the entire chip (including the test and emulation logic), resetting modules that use reset asynchronously.
   - The PLL1 controller clocks are started at the frequency of the system reference clock. The clocks are propagated throughout the chip to reset modules that use reset synchronously. By default, PLL1 is in reset and unlocked.
   - The PLL2 controller clocks are started at the frequency of the system reference clock. PLL2 is held in reset. Since the PLL2 controller always operates in PLL mode, the system reference clock and all the system clocks are invalid at this point.
   - The $\overline{\text{RESETSTAT}}$ pin stays asserted (low), indicating the device is in reset.
3. The $\overline{\text{POR}}$ pin may now be deasserted (driven high).

 Copyright © 2006–2012, Texas Instruments Incorporated

When the $\overline{\text{POR}}$ pin is deasserted, the configuration pin values are latched and the PLL controllers change their system clocks to their default divide-down values. PLL2 is taken out of reset and automatically starts its locking sequence. Other device initialization is also started.

4. After device initialization is complete, the $\overline{\text{RESETSTAT}}$ pin is deasserted (driven high). By this time, PLL2 has already completed its locking sequence and is outputting a valid clock. The system clocks of both PLL controllers are allowed to finish their current cycles and then paused for 10 cycles of their respective system reference clocks. After the pause the system clocks are restarted at their default divide-by settings.
5. The device is now out of reset, device execution begins as dictated by the selected boot mode (see Section 2.4, *Boot Sequence*).

NOTE

To most of the device, reset is de-asserted only when the $\overline{\text{POR}}$ and $\overline{\text{RESET}}$ pins are both de-asserted (driven high). Therefore, in the sequence described above, if the $\overline{\text{RESET}}$ pin is held low past the low period of the $\overline{\text{POR}}$ pin, most of the device will remain in reset. The only exception being that PLL2 is taken out of reset as soon as $\overline{\text{POR}}$ is de-asserted (driven high), regardless of the state of the $\overline{\text{RESET}}$ pin. The $\overline{\text{RESET}}$ pin should not be tied together with the $\overline{\text{POR}}$ pin.

7.6.2 Warm Reset ($\overline{\text{RESET}}$ Pin)

A Warm Reset has the same effects as a Power-on Reset, except that in this case, the test and emulation logic and PLL2 are not reset.

The following sequence must be followed during a Warm Reset:

1. Hold the $\overline{\text{RESET}}$ pin low for a minimum of 24 CLKIN1 cycles. Within the minimum 24 CLKIN1 cycles.

   Within the low period of the $\overline{\text{RESET}}$ pin, the following happens:
   - The Z group pins, low group pins, and the high group pins are set to their reset state with one exception:

     The PCI pins are not affected by warm reset if the PCI module was enabled before $\overline{\text{RESET}}$ went low. In this case, PCI pins stay at whatever their value was before $\overline{\text{RESET}}$ went low.
   - The reset signals flow to the entire chip (excluding the test and emulation logic), resetting modules that use reset asynchronously.
   - The PLL1 controller is reset thereby switching back to bypass mode and resetting all its registers to their default values. PLL1 is placed in reset and loses lock. The PLL1 controller clocks start running at the frequency of the system reference clock. The clocks are propagated throughout the chip to reset modules that use reset synchronously.
   - The PLL2 controller is reset thereby resetting all its registers to their default values. The PLL2 controller clocks start running at the frequency of the system reference clock. PLL2 is not reset, therefore it remains locked.
   - The $\overline{\text{RESETSTAT}}$ pin becomes active (low), indicating the device is in reset.
2. The $\overline{\text{RESET}}$ pin may now be released (driven inactive high).

   When the $\overline{\text{RESET}}$ pin is released, the configuration pin values are latched and the PLL controllers immediately change their system clocks to their default divide-down values. Other device initialization is also started.
3. After device initialization is complete, the $\overline{\text{RESETSTAT}}$ pin goes inactive (high). All system clocks are allowed to finish their current cycles and then paused for 10 cycles of their respective system reference clocks. After the pause the system clocks are restarted at their default divide-by settings.
4. The device is now out of reset, device execution begins as dictated by the selected boot mode (see Section 2.4, *Boot Sequence*).

NOTE

The $\overline{\text{POR}}$ pin should be held inactive (high) throughout the Warm Reset sequence. Otherwise, if $\overline{\text{POR}}$ is activated (brought low), the minimum $\overline{\text{POR}}$ pulse width must be met. The $\overline{\text{RESET}}$ pin should not be tied together with the $\overline{\text{POR}}$ pin.

7.6.3 System Reset

The emulator initiates a System Reset via the ICEPick module. This ICEPick-initiated reset is non-maskable. To invoke the maximum reset via the ICEPick module, the user can perform the following from the Code Composer Studio™ menu: Debug → Advanced Resets → System Reset.

The following memory contents are maintained during a System Reset:

- DDR2 Memory Controller: The DDR2 Memory Controller registers are ***not*** reset. In addition, the DDR2 SDRAM memory content is retained if the user places the DDR2 SDRAM in self-refresh mode before invoking the System Reset.
- EMIFA: The contents of the memory connected to the EMIFA are retained. The EMIFA registers are ***not*** reset.

Test, emulation, and clock logic are unaffected. The device configuration pins are also not re-latched and the state of the peripherals (see Table 3-4) is not affected.

During a System Reset, the following happens:

1. The System Reset is initiated by the emulator.

   During this time, the following happens:
   - The reset signals flow to the entire chip resetting all the modules on chip except the test and emulation logic.
   - The PLL controllers are ***not*** reset. Internal system clocks are unaffected. If PLL1/PLL2 were locked before the System Reset, they remain locked.
   - The $\overline{\text{RESETSTAT}}$ pin goes low to indicate an internal reset is being generated.
2. After device initialization is complete, the $\overline{\text{RESETSTAT}}$ pin is deasserted (driven high). In addition, the PLL controllers pause their system clocks for about 10 cycles.

   At this point:
   - The state of the peripherals before the System Reset is not changed. For example, if McBSP0 was in the enabled state before System Reset, it will remain in the enabled state after System Reset.
   - The I/O pins are controlled as dictated by the DEVSTAT register.
   - The DDR2 Memory Controller and EMIFA registers retain their previous values. Only the DDR2 Memory Controller and EMIFA state machines are reset by the System Reset.
   - The PLL controllers are operating in the mode prior to System Reset. System clocks are unaffected.

The boot sequence is started after the system clocks are restarted. Since the configuration pins (including the BOOTMODE[3:0] pins) are not latched with a System Reset, the previous values, as shown in the DEVSTAT register, are used to select the boot mode.

7.6.4 CPU Reset

A CPU Reset is initiated by the HPI or PCI peripheral. This reset only affects the CPU. During a PCI-initiated CPU Reset, the PCI pins are set to their reset state. With the exception of the $\overline{\text{HRDY}}$/$\overline{\text{PIRDY}}$ pin, the PCI pins have a reset state of high-impedance; the $\overline{\text{HRDY}}$/$\overline{\text{PIRDY}}$ pin goes high during reset.

7.6.5 Reset Priority

If any of the above reset sources occur simultaneously, the PLLCTRL only processes the highest priority reset request. The rest request priorities are as follows (high to low):

- Power-on Reset

Copyright © 2006–2012, Texas Instruments Incorporated

- Warm Reset
- System Reset
- CPU Reset

7.6.6 Reset Controller Register

The reset type status (RSTYPE) register (029A 00E4) is the only register for the reset controller. This register falls in the same memory range as the PLL1 controller registers [029A 0000 - 029A 01FF] (see Table 7-18).

7.6.6.1 Reset Type Status Register Description

The rest type status (RSTYPE) register latches the cause of the last reset. If multiple reset sources occur simultaneously, this register latches the highest priority reset source. The reset type status register is shown in Figure 7-7 and described in Table 7-13.

31					16
Reserved					
R-0					

15	4	3	2	1	0
Reserved		SRST	Rsvd	WRST	POR
R-0		R-0	R-0	R-0	R-0

LEGEND: R/W = Read/Write; R = Read only; -*n* = value after reset

Figure 7-7. Reset Type Status Register (RSTYPE) [Hex Address: 029A 00E4]

Table 7-13. Reset Type Status Register (RSTYPE) Field Descriptions

Bit	Field	Value	Description
31:4	Reserved		Reserved. The reserved bit location is always read as 0. A value written to this field has no effect.
3	SRST		System reset.
		0	System Reset was not the last reset to occur.
		1	System Reset was the last reset to occur.
2	Reserved		Reserved. The reserved bit location is always read as 0. A value written to this field has no effect.
1	WRST		Warm reset.
		0	Warm Reset was not the last reset to occur.
		1	Warm Reset was the last reset to occur.
0	POR		Power-on reset.
		0	Power-on Reset was not the last reset to occur.
		1	Power-on Reset was the last reset to occur.

Copyright © 2006–2012, Texas Instruments Incorporated

7.6.7 Reset Electrical Data/Timing

Table 7-14. Timing Requirements for Reset(1) (2) (3)

(see Figure 7-8 and Figure 7-9)

NO.			-720 -850 A-1000/-1000		UNIT
			MIN	MAX	
5	$t_{w(POR)}$	Pulse duration, $\overline{POR}$ low	256D(4)		ns
6	$t_{w(RESET)}$	Pulse duration, $\overline{RESET}$ low	24C		ns
7	$t_{su(boot)}$	Setup time, boot mode and configuration pins valid before $\overline{POR}$ high or $\overline{RESET}$ high(5)	6P		ns
8	$t_{h(boot)}$	Hold time, boot mode and configuration pins valid after $\overline{POR}$ high or $\overline{RESET}$ high(5)	6P		ns

(1) C = 1/CLKIN1 clock frequency in ns.
(2) D = 1/CLKIN2 clock frequency in ns.
(3) P = 1/CPU clock frequency in nanoseconds (ns). Note that after power-on reset and warm reset the CPU frequency is equal to the CLKIN1 frequency divided by three due to the PLL1 controller being reset (see Section 7.6, *Reset Controller*).
(4) If CLKIN2 is not used, $t_{w(POR)}$ must be measured in terms of CLKIN1 cycles; otherwise, use CLKIN2 cycles.
(5) AEA[19:0], ABA[1:0], and PCI_EN are the boot configuration pins during device reset. **Note:** If a configuration pin must be routed out from the device and 3-stated (not driven), the internal pullup/pulldown (IPU/IPD) resistor should not be relied upon; TI recommends the use of an external pullup/pulldown resistor. For more detailed information on pullup/pulldown resistors and situations where external pullup/pulldown resistors are required, see Section 3.7, *Pullup/Pulldown Resistors*.

Table 7-15. Switching Characteristics Over Recommended Operating Conditions During Reset(1)

(see Figure 7-9)

NO.	PARAMETER		-720 -850 A-1000/-1000		UNIT
			MIN	MAX	
9	$t_{d(PORH-RSTATH)}$	Delay time, $\overline{POR}$ high AND $\overline{RESET}$ high to $\overline{RESETSTAT}$ high		15000C	ns

(1) C = 1/CLKIN1 clock frequency in ns.

For Figure 7-8, note the following:

- Z group consists of: all I/O/Z and O/Z pins, except for Low and High group pins. Pins become high impedance as soon as their respective power supply has reached normal operating coditions. Pins remain in high impedance until configured otherwise by their respective peripheral.
- Low group consists of: MTXD0/RMTXD0, MTXD1/RMTXD1, MTXD2/RMTXD2, MTXD3/RMTXD3, MTXD4/RMTXD4, and MTXEN/RMTXEN. Pins become low as soon as their respective power supply has reached normal operating conditions. Pins remain low until configured otherwise by their respective peripheral.
- High group consists of: $\overline{AHOLD}$, ABUSREQ, and $\overline{HRDY}$/$\overline{PIRDY}$. Pins become high as soon as their respective power supply has reached normal operating conditions. Pins remain high until configured otherwise by their respective peripheral. The ABUSREQ pin remains high until the EMIFA is enabled through the PERCFG1 register. Once the EMIFA is enabled, the ABUSREQ pin is driven to its inactive state (driven low).
- All peripherals must be enable through software following a Power-on Reset; for more details, see Section 7.6.1, *Power-on Reset*.
- For power-supply sequence requirements, see Section 7.3.1, *Power-Supply Sequencing*.

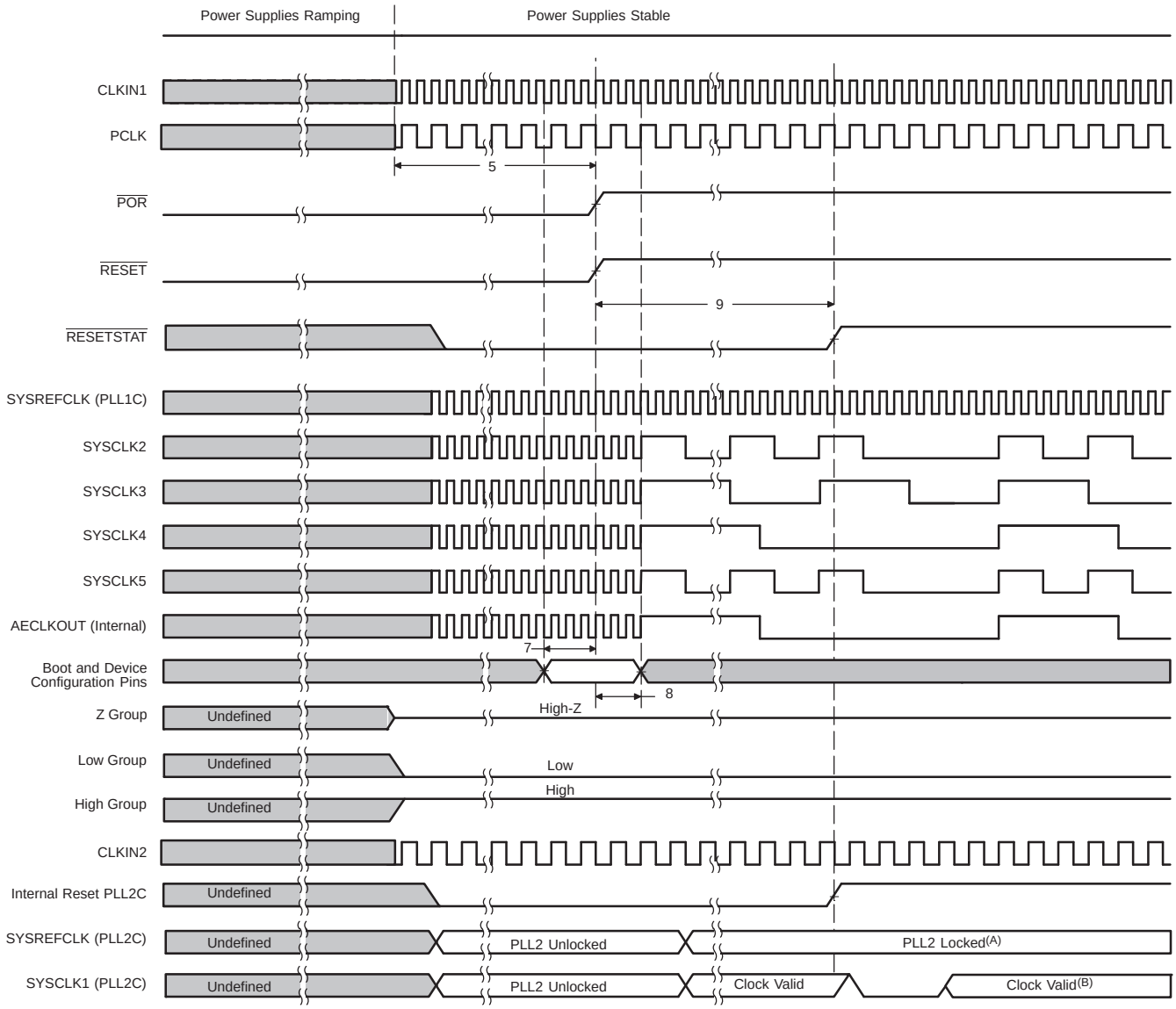

A. SYSREFCLK of the PLL2 controller runs at CLKIN2 ×10.

B. SYSCLK1 of PLL2 controller runs at SYSREFCLK/2 (default).

C. Power supplies, CLKIN1, CLKIN2 (if used), and PCLK (if used) must be stable before the start of $t_{w(POR)}$.

D. Do not tie the $\overline{RESET}$ and $\overline{POR}$ pins together.

E. The $\overline{RESET}$ pin can be brought high after the $\overline{POR}$ pin has been brought high. In this case, the $\overline{RESET}$ pin must be held low for a minimum of $t_{w(RESET)}$ after the $\overline{POR}$ pin has been brought high.

Figure 7-8. Power-Up Timing

Copyright © 2006–2012, Texas Instruments Incorporated

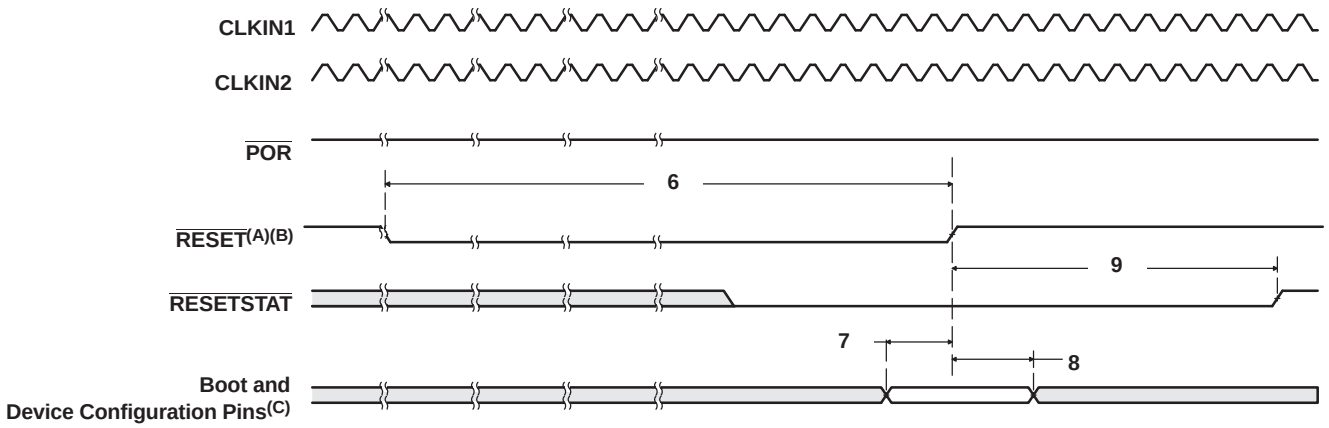

A. $\overline{\text{RESET}}$ should only be used after device has been powered up. For more details on the use of the $\overline{\text{RESET}}$ pin, see Section 7.6, *Reset Controller*.

B. A reset signal is generated internally during a Warm Reset. This internal reset signal has the same effect as the $\overline{\text{RESET}}$ pin during a Warm Reset.

C. Boot and Device Configurations Inputs (during reset) include: AEA[19:0], ABA[1:0], and PCI_EN.

Figure 7-9. Warm Reset Timing

7.7 PLL1 and PLL1 Controller

The primary PLL controller generates the input clock to the C64x+ megamodule (including the CPU) as well as most of the system peripherals such as the multichannel buffered serial ports (McBSPs) and the external memory interface (EMIF).

As shown in Figure 7-10, the PLL1 controller features a software-programmable PLL multiplier controller (PLLM) and five dividers (PREDIV, D2, D3, D4, and D5). The PLL1 controller uses the device input clock CLKIN1 to generate a system reference clock (SYSREFCLK) and four system clocks (SYSCLK2, SYSCLK3, SYSCLK4, and SYSCLK5).

PLL1 power is supplied externally via the PLL1 power-supply pin (PLLV1). An external EMI filter circuit must be added to PLLV1, as shown in Figure 7-10. The 1.8-V supply of the EMI filter must be from the same 1.8-V power plane supplying the I/O power-supply pin, DV_{DD18}. TI requires EMI filter manufacturer Murata, part number NFM18CC222R1C3 or NFM18CC223R1C3.

All PLL external components (C1, C2, and the EMI Filter) must be placed as close to the C64x+ DSP device as possible. For the best performance, TI recommends that all the PLL external components be on a single side of the board without jumpers, switches, or components other than the ones shown. For reduced PLL jitter, maximize the spacing between switching signals and the PLL external components (C1, C2, and the EMI Filter).

The minimum CLKIN1 rise and fall times should also be observed. For the input clock timing requirements, see Section 7.7.4, *PLL1 Controller Input and Output Clock Electrical Data/Timing*.

CAUTION

The PLL controller module as described in the *TMS320C645x DSP Software-Programmable Phase-Locked Loop (PLL) Controller User's Guide* (literature number SPRUE56) includes a superset of features, some of which are not supported on the C6454 DSP. The following sections describe the features that are supported; it should be assumed that any feature not included in these sections is not supported by the C6454 DSP.

 Copyright © 2006–2012, Texas Instruments Incorporated

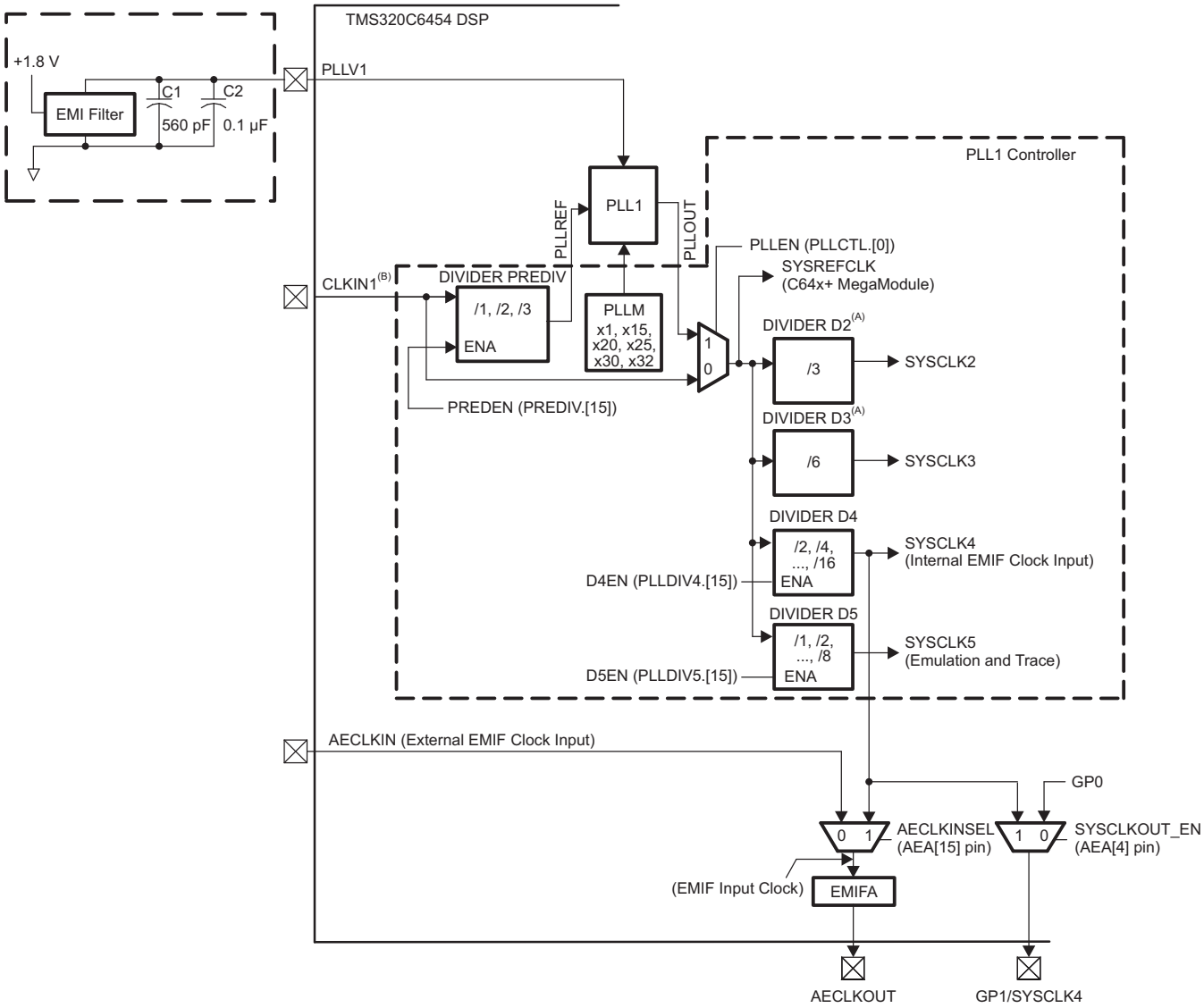

A. DIVIDER D2 and DIVIDER D3 are always enabled.
B. CLKIN1 is a 3.3-V signal.

Figure 7-10. PLL1 and PLL1 Controller

7.7.1 PLL1 Controller Device-Specific Information

7.7.1.1 Internal Clocks and Maximum Operating Frequencies

As shown in Figure 7-10, the PLL1 controller generates several internal clocks including the system reference clock (SYSREFCLK), and the system clocks (SYSCLK2/3/4/5). The high-frequency clock signal SYSREFCLK is directly used to clock the C64x+ megamodule (including the CPU) and also serves as a reference clock for the rest of the DSP system.

Dividers D2, D3, D4, and D5 divide the high-frequency clock SYSREFCLK to generate SYSCLK2, SYSCLK3, SYSCLK4, and SYSCLK5, respectively. The system clocks are used to clock different portions of the DSP:

- SYSCLK2 is used to clock the switched central resources (SCRs), EDMA3, as well as the data bus interfaces of the EMIFA and DDR2 Memory Controller.
- SYSCLK3 clocks the PCI, HPI, McBSP, GPIO, TIMER, and I2C peripherals, as well as the configuration bus of the PLL2 Controller.

- SYSCLK4 is used as the internal clock for the EMIFA. It is also used to clock other logic within the DSP.
- SYSCLK5 clocks the emulation and trace logic of the DSP.

The divider ratio bits of dividers D2 and D3 are fixed at ÷3 and ÷6, respectively. The divider ratio bits of dividers D4 and D5 are programmable through the PLL controller divider registers PLLDIV4 and PLLDIV5, respectively.

The PLL multiplier controller (PLLM) and the dividers (D4 and D5) must be programmed after reset. **There is no hardware CLKMODE selection on the C6454 device.**

Since the divider ratio bits for dividers D2 and D3 are fixed, the frequency of SYSCLK2 and SYSCLK3 is tied to the frequency of SYSREFCLK. However, the frequency of SYSCLK4 and SYSCLK5 depends on the configuration of dividers D4 and D5. For example, with PLLM in the PLL1 multiply control register set to 10011b (x20 mode) and a 50-MHz CLKIN1 input, the PLL output PLLOUT is set to 1000 MHz and SYSCLK2 and SYSCLK3 run at 333 MHz and 166 MHz, respectively. Divider D4 can be programmed through the PLLDIV4 register to divide SYSREFCLK by 10 such that SYSCLK4 and, hence, the EMIF internal clock, runs at 120 MHz.

All hosts (HPI, PCI, etc.) must hold off accesses to the DSP while the frequency of its internal clocks is changing. A mechanism must be in place such that the DSP notifies the host when the PLL configuration has completed.

Note that there is a minimum and maximum operating frequency for PLLREF, PLLOUT, SYSCLK4, and SYSCLK5. The PLL1 Controller must not be configured to exceed any of these constraints (certain combinations of external clock input, internal dividers, and PLL multiply ratios might not be supported). For the PLL clocks input and output frequency ranges, see Table 7-16.

Table 7-16. PLL1 Clock Frequency Ranges

CLOCK SIGNAL	MIN	MAX	UNIT
CLKIN1		66.6	MHz
PLLREF (PLLEN = 1)(1)	33.3	66.6	MHz
PLLOUT(1)	400	1000	MHz
SYSCLK4	25	166	MHz
SYSCLK5		333	MHz

(1) Only applies when the PLL1 Controller is set to PLL mode (PLLEN = 1 in the PLLCTL register).

7.7.1.2 PLL1 Controller Operating Modes

The PLL1 controller has two modes of operation: bypass mode and PLL mode. The mode of operation is determined by the PLLEN bit of the PLL control register (PLLCTL). In PLL mode, SYSREFCLK is generated from the device input clock CLKIN1 using the divider PREDIV and the PLL multiplier PLLM. In bypass mode, CLKIN1 is fed directly to SYSREFCLK.

All hosts (HPI, PCI, etc.) must hold off accesses to the DSP while the frequency of its internal clocks is changing. A mechanism must be in place such that the DSP notifies the host when the PLL configuration has completed.

7.7.1.3 PLL1 Stabilization, Lock, and Reset Times

The PLL stabilization time is the amount of time that must be allotted for the internal PLL regulators to become stable after device powerup. The PLL should not be operated until this stabilization time has expired.

The PLL reset time is the amount of wait time needed when resetting the PLL (writing PLLRST = 1), in order for the PLL to properly reset, before bringing the PLL out of reset (writing PLLRST = 0). For the PLL1 reset time value, see Table 7-17.

 Copyright © 2006–2012, Texas Instruments Incorporated

The PLL lock time is the amount of time needed from when the PLL is taken out of reset (PLLRST = 1 with PLLEN = 0) to when to when the PLL controller can be switched to PLL mode (PLLEN = 1). The PLL1 lock time is given in Table 7-17.

Table 7-17. PLL1 Stabilization, Lock, and Reset Times

	MIN	TYP	MAX	UNIT
PLL stabilization time	150			µs
PLL lock time			2000*C (1)	ns
PLL reset time	128*C (1)			ns

(1) C = CLKIN1 cycle time in ns. For example, when CLKIN1 frequency is 50 MHz, use C = 20 ns.

7.7.2 PLL1 Controller Memory Map

The memory map of the PLL1 controller is shown in Table 7-18. Note that only registers documented here are accessible on the TMS320C6454 device. Other addresses in the PLL1 controller memory map should not be modified.

Table 7-18. PLL1 Controller Registers (Including Reset Controller)

HEX ADDRESS RANGE	ACRONYM	REGISTER NAME
029A 0000 - 029A 00E3	-	Reserved
029A 00E4	RSTYPE	Reset Type Status Register (Reset Controller)
029A 00E8 - 029A 00FF	-	Reserved
029A 0100	PLLCTL	PLL Control Register
029A 0104	-	Reserved
029A 0108	-	Reserved
029A 010C	-	Reserved
029A 0110	PLLM	PLL Multiplier Control Register
029A 0114	PREDIV	PLL Pre-Divider Control Register
029A 0118	-	Reserved
029A 011C	-	Reserved
029A 0120	-	Reserved
029A 0124	-	Reserved
029A 0128	-	Reserved
029A 012C	-	Reserved
029A 0130	-	Reserved
029A 0134	-	Reserved
029A 0138	PLLCMD	PLL Controller Command Register
029A 013C	PLLSTAT	PLL Controller Status Register
029A 0140	ALNCTL	PLL Controller Clock Align Control Register
029A 0144	DCHANGE	PLLDIV Ratio Change Status Register
029A 0148	-	Reserved
029A 014C	-	Reserved
029A 0150	SYSTAT	SYSCLK Status Register
029A 0154	-	Reserved
029A 0158	-	Reserved
029A 015C	-	Reserved
029A 0160	PLLDIV4	PLL Controller Divider 4 Register
029A 0164	PLLDIV5	PLL Controller Divider 5 Register
029A 0168 - 029B FFFF	-	Reserved

7.7.3 PLL1 Controller Register Descriptions

This section provides a description of the PLL1 controller registers. For details on the operation of the PLL controller module, see the *TMS320C645x DSP Software-Programmable Phase-Locked Loop (PLL) Controller User's Guide* (literature number SPRUE56).

NOTE: The PLL1 controller registers can only be accessed using the CPU or the emulator.

Not all of the registers documented in the *TMS320C645x DSP Software-Programmable Phase-Locked Loop (PLL) Controller User's Guide* (literature number SPRUE56) are supported on the TMS320C6454 DSP. Only those registers documented in this section are supported. Furthermore, only the bits within the registers described here are supported. You should not write to any reserved memory location or change the value of reserved bits.

7.7.3.1 PLL1 Control Register

The PLL control register (PLLCTL) is shown in Figure 7-11 and described in Table 7-19.

31								16
Reserved								
R-0								

15	8	7	6	5	4	3	2	1	0
Reserved		Rsvd	Rsvd	Reserved		PLLRST	Rsvd	PLL PWRDN	PLLEN
R-0		R/W-0	R-1	R/W-0		R/W-1	R-0	R/W-0	R/W-0

LEGEND: R/W = Read/Write; R = Read only; -*n* = value after reset

Figure 7-11. PLL1 Control Register (PLLCTL) [Hex Address: 029A 0100]

Table 7-19. PLL1 Control Register (PLLCTL) Field Descriptions

Bit	Field	Value	Description
31:8	Reserved		Reserved. The reserved bit location is always read as 0. A value written to this field has no effect.
7	Reserved		Reserved. Writes to this register must keep this bit as 0.
6	Reserved		Reserved. The reserved bit location is always read as 1. A value written to this field has no effect.
5:4	Reserved		Reserved. Writes to this register must keep this bit as 0.
3	PLLRST		PLL reset bit
		0	PLL reset is released
		1	PLL reset is asserted
2	Reserved		Reserved. The reserved bit location is always read as 0. A value written to this field has no effect.
1	PLLPWRDN		PLL power-down mode select bit
		0	PLL is operational
		1	PLL is placed in power-down state, i.e., all analog circuitry in the PLL is turned-off
0	PLLEN		PLL enable bit
		0	Bypass mode. Divider PREDIV and PLL are bypassed. All the system clocks (SYSCLK*n*) are divided down directly from input reference clock.
		1	PLL mode. Divider PREDIV and PLL are not bypassed. PLL output path is enabled. All the system clocks (SYSCLK*n*) are divided down from PLL output.

 Copyright © 2006–2012, Texas Instruments Incorporated

7.7.3.2 PLL Multiplier Control Register

The PLL multiplier control register (PLLM) is shown in Figure 7-12 and described in Table 7-20. The PLLM register defines the input reference clock frequency multiplier in conjunction with the PLL divider ratio bits (RATIO) in the PLL controller pre-divider register (PREDIV).

31	16
Reserved	
R-0	

15	5	4	0
Reserved		PLLM	
R-0		R/W-0h	

LEGEND: R/W = Read/Write; R = Read only; -*n* = value after reset

Figure 7-12. PLL Multiplier Control Register (PLLM) [Hex Address: 029A 0110]

Table 7-20. PLL Multiplier Control Register (PLLM) Field Descriptions

Bit	Field	Value	Description
31:5	Reserved	0	Reserved. The reserved bit location is always read as 0. A value written to this field has no effect.
4:0	PLLM		PLL multiplier bits. Defines the frequency multiplier of the input reference clock in conjunction with the PLL divider ratio bits (RATIO) in PREDIV.
		0h	x1 multiplier rate
		Eh	x15 multiplier rate
		13h	x20 multiplier rate
		18h	x25 multiplier rate
		1Dh	x30 multiplier rate
		1Fh	x32 multiplier rate

7.7.3.3 PLL Pre-Divider Control Register

The PLL pre-divider control register (PREDIV) is shown in Figure 7-13 and described in Table 7-21.

31			16
Reserved			
R-0			

15	14	5	4	0
PREDEN	Reserved		RATIO	
R/W-1	R-0		R/W-2h	

LEGEND: R/W = Read/Write; R = Read only; -*n* = value after reset

Figure 7-13. PLL Pre-Divider Control Register (PREDIV) [Hex Address: 029A 0114]

Table 7-21. PLL Pre-Divider Control Register (PREDIV) Field Descriptions

Bit	Field	Value	Description
31:16	Reserved	0	Reserved. The reserved bit location is always read as 0. A value written to this field has no effect.
15	PREDEN		Pre-divider enable bit.
		0	Pre-divider is disabled. No clock output.
		1	Pre-divider is enabled.
14:5	Reserved	0	Reserved. The reserved bit location is always read as 0. A value written to this field has no effect.
4:0	RATIO	0-1Fh	Divider ratio bits.
		0	÷1. Divide frequency by 1.
		1h	÷2. Divide frequency by 2.
		2h	÷3. Divide frequency by 3.
		3h-1Fh	Reserved, do not use.

Copyright © 2006–2012, Texas Instruments Incorporated

7.7.3.4 PLL Controller Divider 4 Register

The PLL controller divider 4 register (PLLDIV4) is shown in Figure 7-14 and described in Table 7-22.

Besides being used as the EMIFA internal clock, SYSCLK4 is also used in other parts of the system. Disabling this clock will cause unpredictable system behavior. Therefore, the PLLDIV4 register should never be used to disable SYSCLK4.

31			16
Reserved			
R-0			

15	14	5	4	0
D4EN	Reserved		RATIO	
R/W-1	R-0		R/W-3	

LEGEND: R/W = Read/Write; R = Read only; -*n* = value after reset

Figure 7-14. PLL Controller Divider 4 Register (PLLDIV4) [Hex Address: 029A 0160]

Table 7-22. PLL Controller Divider 4 Register (PLLDIV4) Field Descriptions

Bit	Field	Value	Description
31:16	Reserved	0	Reserved. The reserved bit location is always read as 0. A value written to this field has no effect.
15	D4EN		Divider 4 enable bit.
		0	Divider 4 is disabled. No clock output.
		1	Divider 4 is enabled.
14:5	Reserved	0	Reserved. The reserved bit location is always read as 0. A value written to this field has no effect.
4:0	RATIO	0-1Fh	Divider ratio bits.
		0	÷2. Divide frequency by 2.
		1h	÷4. Divide frequency by 4.
		2h	÷6. Divide frequency by 6.
		3h	÷8. Divide frequency by 8.
		4h-7h	÷10 to ÷16. Divide frequency by 10 to divide frequency by 16.
		8h-1Fh	Reserved, do not use.

7.7.3.5 PLL Controller Divider 5 Register

The PLL controller divider 5 register (PLLDIV5) is shown in Figure 7-15 and described in Table 7-23.

31			16
Reserved			
R-0			

15	14	5	4	0
D5EN	Reserved		RATIO	
R/W-1	R-0		R/W-3	

LEGEND: R/W = Read/Write; R = Read only; -*n* = value after reset

Figure 7-15. PLL Controller Divider 5 Register (PLLDIV5) [Hex Address: 029A 0164]

Table 7-23. PLL Controller Divider 5 Register (PLLDIV5) Field Descriptions

Bit	Field	Value	Description
31:16	Reserved	0	Reserved. The reserved bit location is always read as 0. A value written to this field has no effect.
15	D5EN		Divider 5 enable bit.
		0	Divider 5 is disabled. No clock output.
		1	Divider 5 is enabled.
14:5	Reserved	0	Reserved. The reserved bit location is always read as 0. A value written to this field has no effect.
4:0	RATIO	0-1Fh	Divider ratio bits.
		0	÷1. Divide frequency by 1.
		1h	÷2. Divide frequency by 2.
		2h	÷3. Divide frequency by 3.
		3h	÷4. Divide frequency by 4.
		4h-7h	÷5 to ÷8. Divide frequency by 5 to divide frequency by 8.
		8h-1Fh	Reserved, do not use.

Copyright © 2006–2012, Texas Instruments Incorporated

7.7.3.6 PLL Controller Command Register

The PLL controller command register (PLLCMD) contains the command bit for GO operation. PLLCMD is shown in Figure 7-16 and described in Table 7-24.

31			16
Reserved			
R-0			

15	2	1	0
Reserved		Rsvd	GOSET
R-0		R/W-0	R/W-0

LEGEND: R/W = Read/Write; R = Read only; -*n* = value after reset

Figure 7-16. PLL Controller Command Register (PLLCMD) [Hex Address: 029A 0138]

Table 7-24. PLL Controller Command Register (PLLCMD) Field Descriptions

Bit	Field	Value	Description
31:2	Reserved	0	Reserved. The reserved bit location is always read as 0. A value written to this field has no effect.
1	Reserved		Reserved. The reserved bit location is always read as 0. A value written to this field has no effect.
0	GOSET		GO operation command for SYSCLK rate change and phase alignment. Before setting this bit to 1 to initiate a GO operation, check the GOSTAT bit in the PLLSTAT register to ensure all previous GO operations have completed.
		0	No effect. Write of 0 clears bit to 0.
		1	Initiates GO operation. Write of 1 initiates GO operation. Once set, GOSET remains set but further writes of 1 can initiate the GO operation.

7.7.3.7 PLL Controller Status Register

The PLL controller status register (PLLSTAT) shows the PLL controller status. PLLSTAT is shown in Figure 7-17 and described in Table 7-25.

31	16
Reserved	
R-0	

15	1	0
Reserved		GOSTAT
R-0		R-0

LEGEND: R/W = Read/Write; R = Read only; *-n* = value after reset

Figure 7-17. PLL Controller Status Register (PLLSTAT) [Hex Address: 029A 013C]

Table 7-25. PLL Controller Status Register (PLLSTAT) Field Descriptions

Bit	Field	Value	Description
31:1	Reserved	0	Reserved. The reserved bit location is always read as 0. A value written to this field has no effect.
0	GOSTAT		GO operation status.
		0	GO operation is not in progress. SYSCLK divide ratios are not being changed.
		1	GO operation is in progress. SYSCLK divide ratios are being changed.

Copyright © 2006–2012, Texas Instruments Incorporated

7.7.3.8 PLL Controller Clock Align Control Register

The PLL controller clock align control register (ALNCTL) is shown in Figure 7-18 and described in Table 7-26.

31					16
Reserved					
R-0					

15	5	4	3	2	0
Reserved		ALN5	ALN4	Reserved	
R-0		R-1	R-1	R-1	

LEGEND: R/W = Read/Write; R = Read only; -*n* = value after reset

Figure 7-18. PLL Controller Clock Align Control Register (ALNCTL) [Hex Address: 029A 0140]

Table 7-26. PLL Controller Clock Align Control Register (ALNCTL) Field Descriptions

Bit	Field	Value	Description
31:5	Reserved	0	Reserved. The reserved bit location is always read as 0. A value written to this field has no effect.
4:3	ALN*n*		SYSCLK*n* alignment. Do not change the default values of these fields.
		0	Do not align SYSCLK*n* to other SYSCLKs during GO operation. If SYS*n* in DCHANGE is set to 1, SYSCLK*n* switches to the new ratio immediately after the GOSET bit in PLLCMD is set.
		1	Align SYSCLK*n* to other SYSCLKs selected in ALNCTL when the GOSET bit in PLLCMD is set. The SYSCLK*n* ratio is set to the ratio programmed in the RATIO bit in PLLDIV*n*.
2:0	Reserved	0	Reserved. The reserved bit location is always read as 0. A value written to this field has no effect.

7.7.3.9 PLLDIV Ratio Change Status Register

Whenever a different ratio is written to the PLLDIV*n* registers, the PLLCTRL flags the change in the PLLDIV ratio change status registers (DCHANGE). During the GO operation, the PLL controller will only change the divide ratio of the SYSCLKs with the bit set in DCHANGE. Note that changed clocks will be automatically aligned to other clocks. The PLLDIV divider ratio change status register is shown in Figure 7-19 and described in Table 7-27.

31				16
Reserved				
R-0				

15	5	4	3	2	0
Reserved		SYS5	SYS4	Reserved	
R-0		R-0	R-0	R-0	

LEGEND: R/W = Read/Write; R = Read only; -*n* = value after reset

Figure 7-19. PLLDIV Divider Ratio Change Status Register (DCHANGE) [Hex Address: 029A 0144]

Table 7-27. PLLDIV Divider Ratio Change Status Register (DCHANGE) Field Descriptions

Bit	Field	Value	Description
31:5	Reserved	0	Reserved. The reserved bit location is always read as 0. A value written to this field has no effect.
4	SYS5		Identifies when the SYSCLK5 divide ratio has been modified.
		0	SYSCLK5 ratio has not been modified. When GOSET is set, SYSCLK5 will not be affected.
		1	SYSCLK5 ratio has been modified. When GOSET is set, SYSCLK5 will change to the new ratio.
3	SYS4		Identifies when the SYSCLK4 divide ratio has been modified.
		0	SYSCLK4 ratio has not been modified. When GOSET is set, SYSCLK4 will not be affected.
		1	SYSCLK4 ratio has been modified. When GOSET is set, SYSCLK4 will change to the new ratio.
2:0	Reserved	0	Reserved. The reserved bit location is always read as 0. A value written to this field has no effect.

Copyright © 2006–2012, Texas Instruments Incorporated

7.7.3.10 SYSCLK Status Register

The SYSCLK status register (SYSTAT) shows the status of the system clocks (SYSCLK*n*). SYSTAT is shown in Figure 7-20 and described in Table 7-28.

31						16
Reserved						
R-0						

15						8
Reserved						
R-0						

7	5	4	3	2	1	0
Reserved		SYS5ON	SYS4ON	SYS3ON	SYS2ON	Reserved
R-0		R-1	R-1	R-1	R-1	R-1

LEGEND: R = Read only; -*n* = value after reset

Figure 7-20. SYSCLK Status Register (SYSTAT) [Hex Address: 029A 0150]

Table 7-28. SYSCLK Status Register (SYSTAT) Field Descriptions

Bit	Field	Value	Description
31:4	Reserved	0	Reserved. The reserved bit location is always read as 0. A value written to this field has no effect.
4:1	SYS*n*ON		SYSCLK*n* on status.
		0	SYSCLK*n* is gated.
		1	SYSCLK*n* is on.
0	Reserved	1	Reserved. The reserved bit location is always read as 1. A value written to this field has no effect.

7.7.4 PLL1 Controller Input and Output Clock Electrical Data/Timing

Table 7-29. Timing Requirements for CLKIN1 Devices(1) (2) (3)

(see Figure 7-21)

NO.			-720 -850 A-1000/-1000 PLL MODES x1 (Bypass), x15, x20, x25, x30, x32 MIN	MAX	UNIT
1	$t_{c(CLKIN1)}$	Cycle time, CLKIN1(4)	15	30.3	ns
2	$t_{w(CLKIN1H)}$	Pulse duration, CLKIN1 high	0.4C		ns
3	$t_{w(CLKIN1L)}$	Pulse duration, CLKIN1 low	0.4C		ns
4	$t_{t(CLKIN1)}$	Transition time, CLKIN1		1.2	ns
5	$t_{J(CLKIN1)}$	Period jitter (peak-to-peak), CLKIN1		100	ps

(1) The reference points for the rise and fall transitions are measured at 3.3 V V_{IL} MAX and V_{IH} MIN.
(2) For more details on the PLL multiplier factors (x1 [BYPASS], x 15, x20, x25, x30, x32), see Section 7.7.1.2, *PLL1 Controller Operating Modes*.
(3) C = **CLKIN1** cycle time in ns. For example, when CLKIN1 frequency is 50 MHz, use C = 20 ns.
(4) The PLL1 multiplier factors (x1 [BYPASS], x 15, x20, x25, x30, x32) further limit the MIN and MAX values for $t_{c(CLKIN1)}$. For more detailed information on these limitations, see Section 7.7.1.1, *Internal Clocks and Maximum Operating Frequencies*.

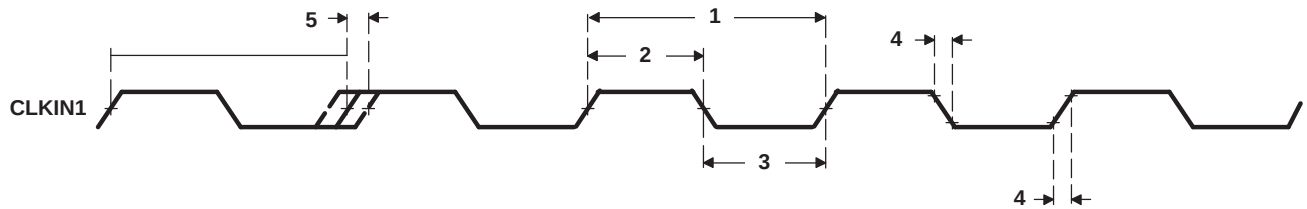

Figure 7-21. CLKIN1 Timing

Table 7-30. Switching Characteristics Over Recommended Operating Conditions for SYSCLK4 [CPU/8 - CPU/12](1) (2)

(see Figure 7-22)

NO.	PARAMETER		-720 -850 A-1000/-1000 MIN	MAX	UNIT
2	$t_{w(CKO3H)}$	Pulse duration, SYSCLK4 high	4P - 0.7	6P + 0.7	ns
3	$t_{w(CKO3L)}$	Pulse duration, SYSCLK4 low	4P - 0.7	6P + 0.7	ns
4	$t_{t(CKO3)}$	Transition time, SYSCLK4		1	ns

(1) The reference points for the rise and fall transitions are measured at 3.3 V V_{OL} MAX and V_{OH} MIN.
(2) P = 1/CPU clock frequency in nanoseconds (ns)

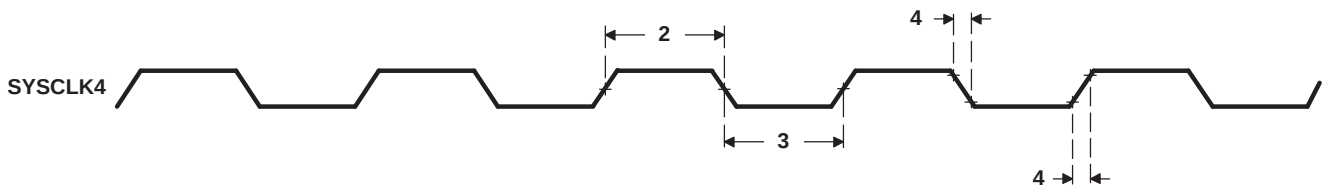

Figure 7-22. SYSCLK4 Timing

Copyright © 2006–2012, Texas Instruments Incorporated

7.8 PLL2 and PLL2 Controller

The secondary PLL controller generates interface clocks for the Ethernet media access controller (EMAC) and the DDR2 memory controller.

As shown in Figure 7-23, the PLL2 controller features a PLL multiplier controller and one divider (D1). The PLL multiplier is fixed to a x20 multiplier rate and the divider D1 can be programmed to a ÷2 or ÷5 mode.

PLL2 power is supplied externally via the PLL2 power supply (PLLV2). An external PLL filter circuit must be added to PLLV2 as shown in Figure 7-23. The 1.8-V supply for the EMI filter must be from the same 1.8-V power plane supplying the I/O power-supply pin, DV_{DD18}. TI requires EMI filter manufacturer Murata, part number NFM18CC222R1C3 or NFM18CC223R1C3.

All PLL external components (C161, C162, and the EMI Filter) should be placed as close to the C64x+ DSP device as possible. For the best performance, TI requires that all the PLL external components be on a single side of the board without jumpers, switches, or components other than the ones shown. For reduced PLL jitter, maximize the spacing between switching signals and the PLL external components (C161, C162, and the EMI Filter). The minimum CLKIN2 rise and fall times should also be observed. For the input clock timing requirements, see Section 7.8.4, *PLL2 Controller Input Clock Electrical Data/Timing*.

CAUTION

The PLL controller module as described in the *TMS320C645x DSP Software-Programmable Phase-Locked Loop (PLL) Controller User's Guide* (literature number SPRUE56) includes a superset of features, some of which are not supported on the C6454 DSP. The following sections describe the features that are supported; it should be assumed that any feature not included in these sections is not supported by the C6454 DSP.

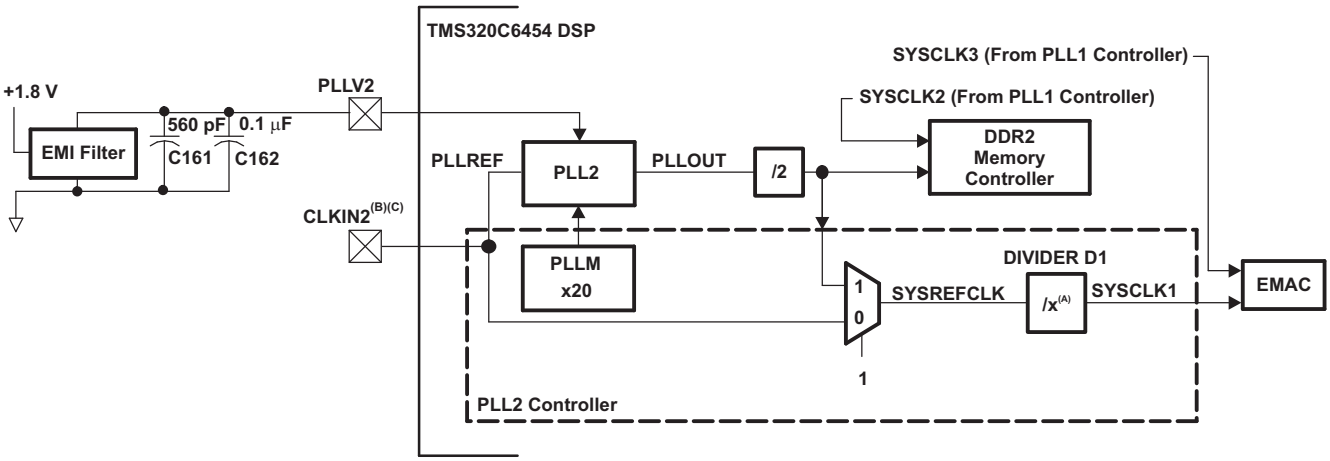

A. /x must be programmed to /2 for GMII (default) and to /5 for RGMII.
B. If EMAC is enabled with RGMII, or GMII, CLKIN2 frequency must be 25 MHz.
C. CLKIN2 is a 3.3-V signal.

Figure 7-23. PLL2 Block Diagram

7.8.1 PLL2 Controller Device-Specific Information

7.8.1.1 Internal Clocks and Maximum Operating Frequencies

As shown in Figure 7-23, the output of PLL2, PLLOUT, is divided by 2 and directly fed to the DDR2 memory controller. This clock is used by the DDR2 memory controller to generate DDR2CLKOUT and $\overline{\text{DDR2CLKOUT}}$. Note that, internally, the data bus interface of the DDR2 memory controller is clocked by SYSCLK2 of the PLL1 controller.

The PLLOUT/2 clock is also fed back into the PLL2 controller where it becomes SYSREFCLK. Divider D1 of the PLL2 controller generates SYSCLK1 for the Ethernet media access controller (EMAC). The EMAC uses SYSCLK1 to generate the necessary clock for each of its interfaces. Divider D1 should be programmed to ÷2 mode [default] when using the Gigabit Media Independent Interface (GMII) mode and to ÷5 mode when using the Reduce Gigabit Media Independent Interface (RGMII). Divider D1 is software programmable and, if necessary, must be programmed after device reset to ÷5 when the RGMII mode of the EMAC is used. Note that, internally, the data bus interface of the EMAC is clocked by SYSCLK3 of the PLL2 controller.

Note that there is a minimum and maximum operating frequency for PLLREF, PLLOUT, and SYSCLK1. The clock generator must not be configured to exceed any of these constraints. For the PLL clocks input and output frequency ranges, see Table 7-31. Also, when EMAC is enabled with RGMII or GMII, CLKIN2 must be 25 MHz.

Table 7-31. PLL2 Clock Frequency Ranges

CLOCK SIGNAL	MIN	MAX	UNIT
PLLREF (PLLEN = 1)	12.5	26.7	MHz
PLLOUT	250	533	MHz
SYSCLK1 (1)	50	125	MHz

(1) SYSCLK1 restriction applies only when the EMAC is enabled and the RGMII or GMII modes are used. SYSCLK1 must be programmed to 125 MHz when the GMII mode is used and to 50 MHz when the RGMII mode is used.

7.8.1.2 PLL2 Controller Operating Modes

Unlike the PLL1 controller which can operate in bypass and a PLL mode, the PLL2 controller only operates in PLL mode. In this mode, SYSREFCLK is generated outside the PLL2 controller by dividing the output of PLL2 by two.

The PLL2 controller is affected by power-on reset and warm reset. During these resets the PLL2 controller registers get reset to their default values. The internal clocks of the PLL2 controller are also affected as described in Section 7.6, *Reset Controller*.

PLL2 is only unlocked during the power-up sequence (see Section 7.6, *Reset Controller*) and is locked by the time the RESETSTAT pin goes high. It does not lose lock during any of the other resets.

 Copyright © 2006–2012, Texas Instruments Incorporated

7.8.2 PLL2 Controller Memory Map

The memory map of the PLL2 controller is shown in Table 7-32. Note that only registers documented here are accessible on the TMS320C6454 device. Other addresses in the PLL2 controller memory map should not be modified.

Table 7-32. PLL2 Controller Registers

HEX ADDRESS RANGE	ACRONYM	DESCRIPTION
029C 0000 - 029C 0114	-	Reserved
029C 0118	PLLDIV1	PLL Controller Divider 1 Register
029C 011C - 029C 0134	-	Reserved
029C 0138	PLLCMD	PLL Controller Command Register
029C 013C	PLLSTAT	PLL Controller Status Register
029C 0140	ALNCTL	PLL Controller Clock Align Control Register
029C 0144	DCHANGE	PLLDIV Ratio Change Status Register
029C 0148	-	Reserved
029C 014C	-	Reserved
029C 0150	SYSTAT	SYSCLK Status Register
029C 0154 - 029C 0190	-	Reserved
029C 0194 - 029C 01FF	-	Reserved
029C 0200 - 029C FFFF	-	Reserved

7.8.3 PLL2 Controller Register Descriptions

This section provides a description of the PLL2 controller registers. For details on the operation of the PLL controller module, see the *TMS320C645x DSP Software-Programmable Phase-Locked Loop (PLL) Controller User's Guide* (literature number SPRUE56).

NOTE: The PLL2 controller registers can only be accessed using the CPU or the emulator.

Not all of the registers documented in the *TMS320C645x DSP Software-Programmable Phase-Locked Loop (PLL) Controller User's Guide* (literature number SPRUE56) are supported on the TMS320C6454 device. Only those registers documented in this section are supported. Furthermore, only the bits within the registers described here are supported. You should not write to any reserved memory location or change the value of reserved bits.

7.8.3.1 PLL Controller Divider 1 Register

The PLL controller divider 1 register (PLLDIV1) is shown in Figure 7-24 and described in Table 7-33.

31			16
Reserved			
R-0			

15	14	5	4	0
D1EN	Reserved		RATIO	
R/W-1	R-0		R/W-1	

LEGEND: R/W = Read/Write; R = Read only; -*n* = value after reset

Figure 7-24. PLL Controller Divider 1 Register (PLLDIV1) [Hex Address: 029C 0118]

Table 7-33. PLL Controller Divider 1 Register (PLLDIV1) Field Descriptions

Bit	Field	Value	Description
31:16	Reserved	0	Reserved. The reserved bit location is always read as 0. A value written to this field has no effect.
15	D1EN		Divider D1 enable bit.
		0	Divider D1 is disabled. No clock output.
		1	Divider D1 is enabled.
14:5	Reserved	0	Reserved. The reserved bit location is always read as 0. A value written to this field has no effect.
4:0	RATIO	0-1Fh	Divider ratio bits.
		1h	÷2. Divide frequency by 2.
		4h	÷5. Divide frequency by 5.
		Others	Reserved

Copyright © 2006–2012, Texas Instruments Incorporated

7.8.3.2 PLL Controller Command Register

The PLL controller command register (PLLCMD) contains the command bit for GO operation. PLLCMD is shown in Figure 7-25 and described in Table 7-34.

31			16
Reserved			
R-0			

15	2	1	0
Reserved		Rsvd	GOSET
R-0		R/W-0	R/W-0

LEGEND: R/W = Read/Write; R = Read only; -*n* = value after reset

Figure 7-25. PLL Controller Command Register (PLLCMD) [Hex Address: 029C 0138]

Table 7-34. PLL Controller Command Register (PLLCMD) Field Descriptions

Bit	Field	Value	Description
31:2	Reserved	0	Reserved. The reserved bit location is always read as 0. A value written to this field has no effect.
1	Reserved		Reserved. The reserved bit location is always read as 0. A value written to this field has no effect.
0	GOSET		GO operation command for SYSCLK rate change and phase alignment. Before setting this bit to 1 to initiate a GO operation, check the GOSTAT bit in the PLLSTAT register to ensure all previous GO operations have completed.
		0	No effect. Write of 0 clears bit to 0.
		1	Initiates GO operation. Write of 1 initiates GO operation. Once set, GOSET remains set but further writes of 1 can initiate the GO operation.

7.8.3.3 PLL Controller Status Register

The PLL controller status register (PLLSTAT) shows the PLL controller status. PLLSTAT is shown in Figure 7-26 and described in Table 7-35.

31	16
Reserved	
R-0	

15	1	0
Reserved		GOSTAT
R-0		R-0

LEGEND: R/W = Read/Write; R = Read only; -*n* = value after reset

Figure 7-26. PLL Controller Status Register (PLLSTAT) [Hex Address: 029C 013C]

Table 7-35. PLL Controller Status Register (PLLSTAT) Field Descriptions

Bit	Field	Value	Description
31:1	Reserved	0	Reserved. The reserved bit location is always read as 0. A value written to this field has no effect.
0	GOSTAT		GO operation status.
		0	Go operation is not in progress. SYSCLK divide ratios are not being changed.
		1	GO operation is in progress. SYSCLK divide ratios are being changed.

7.8.3.4 PLL Controller Clock Align Control Register

The PLL controller clock align control register (ALNCTL) is shown in Figure 7-27 and described in Table 7-36.

31	16
Reserved	
R-0	

15	1	0
Reserved		ALN1
R-0		R/W-1

LEGEND: R/W = Read/Write; R = Read only; -*n* = value after reset

Figure 7-27. PLL Controller Clock Align Control Register (ALNCTL) [Hex Address: 029C 0140]

Table 7-36. PLL Controller Clock Align Control Register (ALNCTL) Field Descriptions

Bit	Field	Value	Description
31:1	Reserved	0	Reserved. The reserved bit location is always read as 0. A value written to this field has no effect.
0	ALN1		SYSCLK1 alignment. Do not change the default values of these fields.
		0	Do not align SYSCLK1 during GO operation. If SYS1 in DCHANGE is set to 1, SYSCLK1 switches to the new ratio immediately after the GOSET bit in PLLCMD is set.
		1	Align SYSCLK1 when the GOSET bit in PLLCMD is set. The SYSCLK1 ratio is set to the ratio programmed in the RATIO bit in PLLDIV1.

Copyright © 2006–2012, Texas Instruments Incorporated

7.8.3.5 PLLDIV Ratio Change Status Register

Whenever a different ratio is written to the PLLDIV1 register, the PLLCTRL flags the change in the DCHANGE status register. During the GO operation, the PLL controller will only change the divide ratio SYSCLK1 if SYS1 in DCHANGE is 1. The PLLDIV divider ratio change status register is shown in Figure 7-28 and described in Table 7-37.

31	16
Reserved	
R-0	

15	1	0
Reserved		SYS1
R-0		R-0

LEGEND: R/W = Read/Write; R = Read only; -*n* = value after reset

Figure 7-28. PLLDIV Divider Ratio Change Status Register (DCHANGE) [Hex Address: 029C 0144]

Table 7-37. PLLDIV Divider Ratio Change Status Register (DCHANGE) Field Descriptions

Bit	Field	Value	Description
31:1	Reserved	0	Reserved. The reserved bit location is always read as 0. A value written to this field has no effect.
0	SYS1		SYSCLK1 divide ratio has been modified. SYSCLK1 ratio will be modified during GO operation.
		0	SYSCLK1 ratio has not been modified. When GOSET is set, SYSCLK1 will not be affected.
		1	SYSCLK1 ratio has been modified. When GOSET is set, SYSCLK1 will change to the new ratio.

7.8.3.6 SYSCLK Status Register

The SYSCLK status register (SYSTAT) shows the status of the system clock (SYSCLK1). SYSTAT is shown in Figure 7-29 and described in Table 7-38.

31	16
Reserved	
R-0	

15	1	0
Reserved		SYS1ON
R-0		R-1

LEGEND: R/W = Read/Write; R = Read only; *-n* = value after reset

Figure 7-29. SYSCLK Status Register [Hex Address: 029C 0150]

Table 7-38. SYSCLK Status Register Field Descriptions

Bit	Field	Value	Description
31:1	Reserved	0	Reserved. The reserved bit location is always read as 0. A value written to this field has no effect.
0	SYS1ON		SYSCLK1 on status.
		0	SYSCLK1 is gated.
		1	SYSCLK1 is on.

Copyright © 2006–2012, Texas Instruments Incorporated

7.8.4 PLL2 Controller Input Clock Electrical Data/Timing

Table 7-39. Timing Requirements for CLKIN2(1) (2) (3)

(see Figure 7-30)

NO.			-720 -850 A-1000/-1000		UNIT
			MIN	MAX	
1	$t_{c(CLKIN2)}$	Cycle time, CLKIN2	37.5	80	ns
2	$t_{w(CLKIN2H)}$	Pulse duration, CLKIN2 high	0.4C		ns
3	$t_{w(CLKIN2L)}$	Pulse duration, CLKIN2 low	0.4C		ns
4	$t_{t(CLKIN2)}$	Transition time, CLKIN2		1.2	ns
5	$t_{J(CLKIN2)}$	Period jitter (peak-to-peak), CLKIN2		100	ps

(1) The reference points for the rise and fall transitions are measured at 3.3 V V_{IL} MAX and V_{IH} MIN.
(2) C = **CLKIN2** cycle time in ns. For example, when CLKIN2 frequency is 25 MHz, use C = 40 ns.
(3) If EMAC is enabled with RGMII or GMII, CLKIN2 cycle time must be 40 ns (25 MHz).

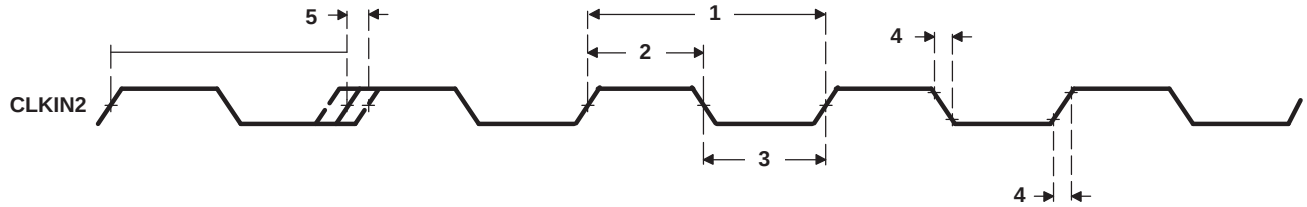

Figure 7-30. CLKIN2 Timing

7.9 DDR2 Memory Controller

The 32-bit, 533-MHz (data rate) DDR2 Memory Controller bus of the C6454 device is used to interface to JESD79-2A standard-compliant DDR2 SDRAM devices. The DDR2 external bus only interfaces to DDR2 SDRAM devices (up to 512 MB); it does not share the bus with any other types of peripherals. The decoupling of DDR2 memories from other devices both simplifies board design and provides I/O concurrency from a second external memory interface, EMIFA.

The internal data bus clock frequency and DDR2 bus clock frequency directly affect the maximum throughput of the DDR2 bus. The clock frequency of the DDR2 bus is equal to the CLKIN2 frequency multiplied by 10. The internal data bus clock frequency of the DDR2 Memory Controller is fixed at a divide-by-three ratio of the CPU frequency. The maximum DDR2 throughput is determined by the smaller of the two bus frequencies. For example, if the internal data bus frequency is 333 MHz (CPU frequency is 1 GHz) and the DDR2 bus frequency is 267 MHz (CLKIN2 frequency is 26.7 MHz), the maximum data rate achievable by the DDR2 memory controller is 2.1 Gbytes/sec. The DDR2 bus is designed to sustain a maximum throughput of up to 2.1 Gbytes/sec at a 533-MHz data rate (267-MHz clock rate), as long as data requests are pending in the DDR2 Memory Controller.

7.9.1 DDR2 Memory Controller Device-Specific Information

The approach to specifying interface timing for the DDR2 memory bus is different than on other interfaces such as EMIF, HPI, and McBSP. For these other interfaces the device timing was specified in terms of data manual specifications and I/O buffer information specification (IBIS) models.

For the C6454 DDR2 memory bus, the approach is to specify compatible DDR2 devices and provide the printed circuit board (PCB) solution and guidelines directly to the user. Texas Instruments (TI) has performed the simulation and system characterization to ensure all DDR2 interface timings in this solution are met. The complete DDR2 system solution is documented in the *Implementing DDR2 PCB Layout on the TMS320C6455/C6454* application report (literature number SPRAAA7).

TI *only* supports designs that follow the board design guidelines outlined in the SPRAAA7 application report.

The DDR2 Memory Controller pins must be enabled by setting the DDR2_EN configuration pin (ABA0) high during device reset. For more details, see Section 3.1, *Device Configuration at Device Reset*.

The ODT[1:0] pins of the memory controller must be left unconnected. The ODT pins on the DDR2 memory device(s) must be connected to ground.

The DDR2 memory controller on the C6454 device supports the following memory topologies:

- A 32-bit wide configuration interfacing to two 16-bit wide DDR2 SDRAM devices.
- A 16-bit wide configuration interfacing to a single 16-bit wide DDR2 SDRAM device.

A race condition may exist when certain masters write data to the DDR2 memory controller. For example, if master A passes a software message via a buffer in external memory and does not wait for indication that the write completes, when master B attempts to read the software message, then the master B read may bypass the master A write and, thus, master B may read stale data and, therefore, receive an incorrect message.

Some master peripherals (e.g., EDMA3 transfer controllers) will always wait for the write to complete before signaling an interrupt to the system, thus avoiding this race condition. For masters that do not have hardware guarantee of write-read ordering, it may be necessary to guarantee data ordering via software.

If master A does not wait for indication that a write is complete, it must perform the following workaround:

1. Perform the required write.
2. Perform a dummy write to the DDR2 memory controller module ID and revision register.
3. Perform a dummy read to the DDR2 memory controller module ID and revision register.
4. Indicate to master B that the data is ready to be read after completion of the read in step 3. The completion of the read in step 3 ensures that the previous write was done.

 Copyright © 2006–2012, Texas Instruments Incorporated

7.9.2 DDR2 Memory Controller Peripheral Register Descriptions

Table 7-40. DDR2 Memory Controller Registers

HEX ADDRESS RANGE	ACRONYM	REGISTER NAME
7800 0000	MIDR	DDR2 Memory Controller Module and Revision Register
7800 0004	DMCSTAT	DDR2 Memory Controller Status Register
7800 0008	SDCFG	DDR2 Memory Controller SDRAM Configuration Register
7800 000C	SDRFC	DDR2 Memory Controller SDRAM Refresh Control Register
7800 0010	SDTIM1	DDR2 Memory Controller SDRAM Timing 1 Register
7800 0014	SDTIM2	DDR2 Memory Controller SDRAM Timing 2 Register
7800 0018	-	Reserved
7800 0020	BPRIO	DDR2 Memory Controller Burst Priority Register
7800 0024 - 7800 004C	-	Reserved
7800 0050 - 7800 0078	-	Reserved
7800 007C - 7800 00BC	-	Reserved
7800 00C0 - 7800 00E0	-	Reserved
7800 00E4	DMCCTL	DDR2 Memory Controller Control Register
7800 00E8 - 7800 00FC	-	Reserved
7800 0100 - 7FFF FFFF	-	Reserved

7.9.3 DDR2 Memory Controller Electrical Data/Timing

The *Implementing DDR2 PCB Layout on the TMS320C6455/C6454* application report (literature number SPRAAA7) specifies a complete DDR2 interface solution for the C6454 device as well as a list of compatible DDR2 devices. TI has performed the simulation and system characterization to ensure all DDR2 interface timings in this solution are met; therefore, no electrical data/timing information is supplied here for this interface.

TI *only* supports designs that follow the board design guidelines outlined in the SPRAAA7 application report.

7.10 External Memory Interface A (EMIFA)

The EMIFA can interface to a variety of external devices or ASICs, including:

- Pipelined and flow-through Synchronous-Burst SRAM (SBSRAM)
- ZBT (Zero Bus Turnaround) SRAM and Late Write SRAM
- Synchronous FIFOs
- Asynchronous memory, including SRAM, ROM, and Flash

7.10.1 EMIFA Device-Specific Information

Timing analysis must be done to verify all AC timings are met. TI recommends utilizing I/O buffer information specification (IBIS) to analyze all AC timings.

To properly use IBIS models to attain accurate timing analysis for a given system, see the *Using IBIS Models for Timing Analysis* application report (literature number SPRA839).

To maintain signal integrity, serial termination resistors should be inserted into all EMIF output signal lines (for the EMIF output signals, see Table 2-3, *Terminal Functions*).

A race condition may exist when certain masters write data to the EMIFA. For example, if master A passes a software message via a buffer in external memory and does not wait for indication that the write completes, when master B attempts to read the software message, then the master B read may bypass the master A write and, thus, master B may read stale data and, therefore, receive an incorrect message.

Some master peripherals (e.g., EDMA3 transfer controllers) will always wait for the write to complete before signaling an interrupt to the system, thus avoiding this race condition. For masters that do not have hardware guarantee of write-read ordering, it may be necessary to guarantee data ordering via software.

If master A does not wait for indication that a write is complete, it must perform the following workaround:

1. Perform the required write.
2. Perform a dummy write to the EMIFA module ID and revision register.
3. Perform a dummy read to the EMIFA module ID and revision register.
4. Indicate to master B that the data is ready to be read after completion of the read in step 3. The completion of the read in step 3 ensures that the previous write was done.

 Copyright © 2006–2012, Texas Instruments Incorporated

7.10.2 EMIFA Peripheral Register Descriptions

Table 7-41. EMIFA Registers

HEX ADDRESS RANGE	ACRONYM	REGISTER NAME
7000 0000	MIDR	Module ID and Revision Register
7000 0004	STAT	Status Register
7000 0008	-	Reserved
7000 000C - 7000 001C	-	Reserved
7000 0020	BURST_PRIO	Burst Priority Register
7000 0024 - 7000 004C	-	Reserved
7000 0050 - 7000 007C	-	Reserved
7000 0080	CE2CFG	EMIFA CE2 Configuration Register
7000 0084	CE3CFG	EMIFA CE3 Configuration Register
7000 0088	CE4CFG	EMIFA CE4 Configuration Register
7000 008C	CE5CFG	EMIFA CE5 Configuration Register
7000 0090 - 7000 009C	-	Reserved
7000 00A0	AWCC	EMIFA Async Wait Cycle Configuration Register
7000 00A4 - 7000 00BC	-	Reserved
7000 00C0	INTRAW	EMIFA Interrupt RAW Register
7000 00C4	INTMSK	EMIFA Interrupt Masked Register
7000 00C8	INTMSKSET	EMIFA Interrupt Mask Set Register
7000 00CC	INTMSKCLR	EMIFA Interrupt Mask Clear Register
7000 00D0 - 7000 00DC	-	Reserved
7000 00E0 - 77FF FFFF	-	Reserved

7.10.3 EMIFA Electrical Data/Timing

Table 7-42. Timing Requirements for AECLKIN for EMIFA[(1) (2)]

(see Figure 7-31)

NO.			-720 -850 A-1000/-1000		UNIT
			MIN	MAX	
1	$t_{c(EKI)}$	Cycle time, AECLKIN	6[(3)]	40	ns
2	$t_{w(EKIH)}$	Pulse duration, AECLKIN high	2.7		ns
3	$t_{w(EKIL)}$	Pulse duration, AECLKIN low	2.7		ns
4	$t_{t(EKI)}$	Transition time, AECLKIN		2	ns
5	$t_{J(EKI)}$	Period Jitter, AECLKIN		0.02E[(4)]	ns

(1) The reference points for the rise and fall transitions are measured at V_{IL} MAX and V_{IH} MIN.
(2) E = the EMIF input clock (AECLKIN or SYSCLK4) period in ns for EMIFA.
(3) Minimum AECLKIN cycle times *must* be met, even when AECLKIN is generated by an internal clock source. Minimum AECLKIN times are based on internal logic speed; the maximum useable speed of the EMIF may be lower due to AC timing requirements.
(4) This timing only applies when AECLKIN is used for EMIFA.

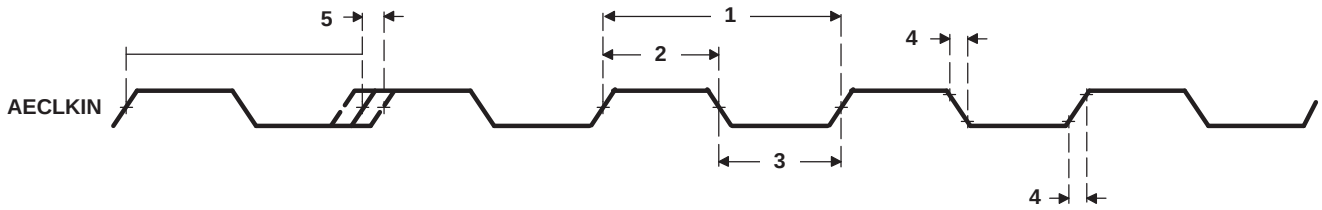

Figure 7-31. AECLKIN Timing for EMIFA

Copyright © 2006–2012, Texas Instruments Incorporated

Table 7-43. Switching Characteristics Over Recommended Operating Conditions for AECLKOUT for the EMIFA Module(1) (2) (3)

(see Figure 7-32)

NO.	PARAMETER		-720 -850 A-1000/-1000		UNIT
			MIN	MAX	
1	$t_{c(EKO)}$	Cycle time, AECLKOUT	E - 0.7	E + 0.7	ns
2	$t_{w(EKOH)}$	Pulse duration, AECLKOUT high	EH - 0.7	EH + 0.7	ns
3	$t_{w(EKOL)}$	Pulse duration, AECLKOUT low	EL - 0.7	EL + 0.7	ns
4	$t_{t(EKO)}$	Transition time, AECLKOUT		1	ns
5	$t_{d(EKIH-EKOH)}$	Delay time, AECLKIN high to AECLKOUT high	1	8	ns
6	$t_{d(EKIL-EKOL)}$	Delay time, AECLKIN low to AECLKOUT low	1	8	ns

(1) E = the EMIF input clock (AECLKIN or SYSCLK4) period in ns for EMIFA.
(2) The reference points for the rise and fall transitions are measured at V_{OL} MAX and V_{OH} MIN.
(3) EH is the high period of E (EMIF input clock period) in ns and EL is the low period of E (EMIF input clock period) in ns for EMIFA.

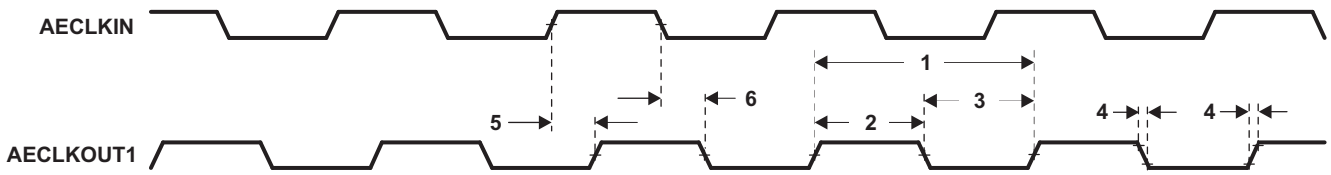

Figure 7-32. AECLKOUT Timing for the EMIFA Module

7.10.3.1 Asynchronous Memory Timing

Table 7-44. Timing Requirements for Asynchronous Memory Cycles for EMIFA Module(1) (2) (3)

(see Figure 7-33 and Figure 7-34)

NO.			-720 -850 A-1000/-1000		UNIT
			MIN	MAX	
3	$t_{su(EDV-A\ OEH)}$	Setup time, AEDx valid before $\overline{AAOE}$ high	6.5		ns
4	$t_{h(AOEH-EDV)}$	Hold time, AEDx valid after $\overline{AAOE}$ high	0		ns
5	$t_{su(ARDY-EKOH)}$	Setup time, AARDY valid before AECLKOUT low	1		ns
6	$t_{h(EKOH-ARDY)}$	Hold time, AARDY valid after AECLKOUT low	2		ns
7	$t_{w(ARDY\ )}$	Pulse width, AARDY assertion and deassertion	2E + 5		ns
8	$t_{d(ARDY-HOLD)}$	Delay time, from AARDY sampled deasserted on AECLKOUT falling to beginning of programmed hold period		4E	ns
9	$t_{su(ARDY-HOLD)}$	Setup time, before end of programmed strobe period by which AARDY should be asserted in order to insert extended strobe wait states.	2E		ns

(1) E = AECLKOUT period in ns for EMIFA
(2) To ensure data setup time, simply program the strobe width wide enough.
(3) AARDY is internally synchronized. To use AARDY as an asynchronous input, the pulse width of the AARDY signal should be at least 2E to ensure setup and hold time is met.

Table 7-45. Switching Characteristics Over Recommended Operating Conditions for Asynchronous Memory Cycles for EMIFA Module(1) (2) (3)

(see Figure 7-33 and Figure 7-34)

NO.	PARAMETER		-720 -850 A-1000/-1000		UNIT
			MIN	MAX	
1	$t_{osu(SELV-AOEL)}$	Output setup time, select signals valid to $\overline{AAOE}$ low	RS * E - 1.5		ns
2	$t_{oh(AOEH-SELIV)}$	Output hold time, $\overline{AAOE}$ high to select signals invalid	RS * E - 1.9		ns
10	$t_{d(EKOH-AOEV)}$	Delay time, AECLKOUT high to $\overline{AAOE}$ valid	1	7	ns
11	$t_{osu(SELV-AWEL)}$	Output setup time, select signals valid to $\overline{AAWE}$ low	WS * E - 1.7		ns
12	$t_{oh(AWEH-SELIV)}$	Output hold time, $\overline{AAWE}$ high to select signals invalid	WH * E - 1.8		ns
13	$t_{d(EKOH-AWEV)}$	Delay time, AECLKOUT high to $\overline{AAWE}$ valid	1.3	7.1	ns

(1) E = AECLKOUT period in ns for EMIFA
(2) RS = Read setup, RST = Read strobe, RH = Read hold, WS = Write setup, WST = Write strobe, WH = Write hold. These parameters are programmed via the EMIFA CE Configuration registers (CEnCFG).
(3) Select signals for EMIFA include: $\overline{ACEx}$, $\overline{ABE}$[7:0], AEA[19:0], ABA[1:0]; and for EMIFA writes, also include AR/$\overline{W}$, AED[63:0].

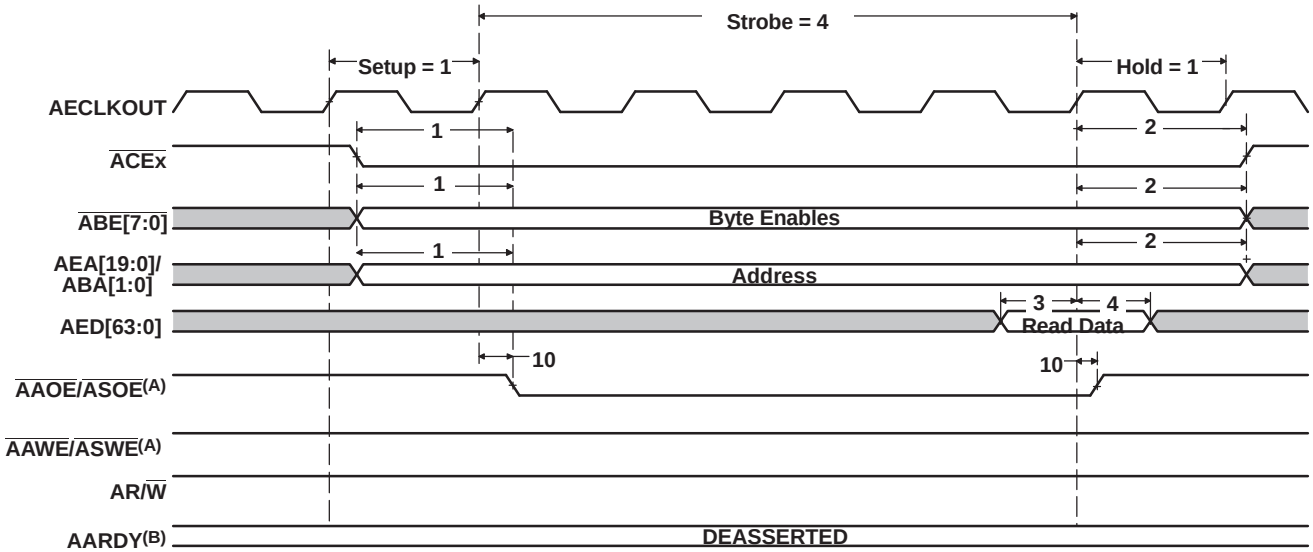

A $\overline{AAOE}$/$\overline{ASOE}$ and $\overline{AAWE}$/$\overline{ASWE}$ operate as $\overline{AAOE}$ (identified under select signals) and $\overline{AAWE}$, respectively, during asynchronous memory accesses.
B Polarity of the AARDY signal is programmable through the AP field of the EMIFA Async Wait Cycle Configuration register (AWCC).

Figure 7-33. Asynchronous Memory Read Timing for EMIFA

 Copyright © 2006–2012, Texas Instruments Incorporated

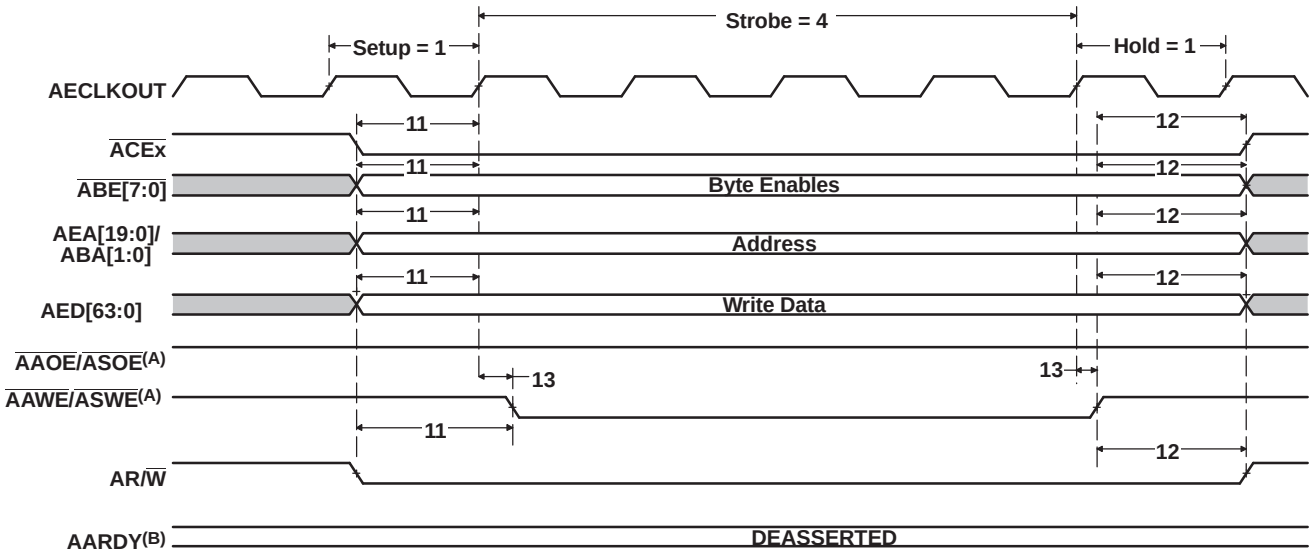

A AAOE/ASOE and AAWE/ASWE operate as AAOE (identified under select signals) and AAWE, respectively, during asynchronous memory accesses.

B Polarity of the AARDY signal is programmable through the AP field of the EMIFA Async Wait Cycle Configuration register (AWCC).

Figure 7-34. Asynchronous Memory Write Timing for EMIFA

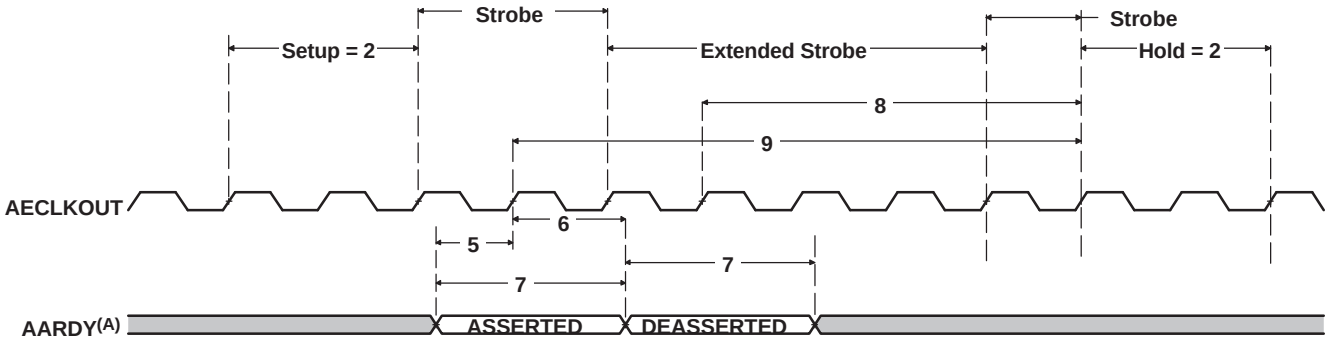

A Polarity of the AARDY signal is programmable through the AP field of the EMIFA Async Wait Cycle Configuration register (AWCC).

Figure 7-35. AARDY Timing

7.10.3.2 Programmable Synchronous Interface Timing

Table 7-46. Timing Requirements for Programmable Synchronous Interface Cycles for EMIFA Module

(see Figure 7-36)

NO.			-720 -850 A-1000/-1000		UNIT
			MIN	MAX	
6	$t_{su(EDV-EKOH)}$	Setup time, read AEDx valid before AECLKOUT high	2		ns
7	$t_{h(EKOH-EDV)}$	Hold time, read AEDx valid after AECLKOUT high	1.5		ns

Table 7-47. Switching Characteristics Over Recommended Operating Conditions for Programmable Synchronous Interface Cycles for EMIFA Module(1)

(see Figure 7-36 through Figure 7-38)

NO.	PARAMETER		-720 -850 A-1000/-1000		UNIT
			MIN	MAX	
1	$t_{d(EKOH-CEV)}$	Delay time, AECLKOUT high to $\overline{ACEx}$ valid	1.3	4.9	ns
2	$t_{d(EKOH-BEV)}$	Delay time, AECLKOUT high to $\overline{ABEx}$ valid		4.9	ns
3	$t_{d(EKOH-BEIV)}$	Delay time, AECLKOUT high to $\overline{ABEx}$ invalid	1.3		ns
4	$t_{d(EKOH-EAV)}$	Delay time, AECLKOUT high to AEAx valid		4.9	ns
5	$t_{d(EKOH-EAIV)}$	Delay time, AECLKOUT high to AEAx invalid	1.3		ns
8	$t_{d(EKOH-ADSV)}$	Delay time, AECLKOUT high to $\overline{ASADS}$/$\overline{ASRE}$ valid	1.3	4.9	ns
9	$t_{d(EKOH-OEV)}$	Delay time, AECLKOUT high to $\overline{ASOE}$ valid	1.3	4.9	ns
10	$t_{d(EKOH-EDV)}$	Delay time, AECLKOUT high to AEDx valid		4.9	ns
11	$t_{d(EKOH-EDIV)}$	Delay time, AECLKOUT high to AEDx invalid	1.3		ns
12	$t_{d(EKOH-WEV)}$	Delay time, AECLKOUT high to $\overline{ASWE}$ valid	1.3	4.9	ns

(1) The following parameters are programmable via the EMIFA CE Configuration registers (CEnCFG):
- Read latency (R_LTNCY): 0-, 1-, 2-, or 3-cycle read latency
- Write latency (W_LTNCY): 0-, 1-, 2-, or 3-cycle write latency
- $\overline{ACEx}$ assertion length (CE_EXT): For standard SBSRAM or ZBT SRAM interface, $\overline{ACEx}$ goes inactive after the final command has been issued (CE_EXT = 0). For synchronous FIFO interface with glue, $\overline{ACEx}$ is active when $\overline{ASOE}$ is active (CE_EXT = 1).
- Function of $\overline{ASADS}$/$\overline{ASRE}$ (R_ENABLE): For standard SBSRAM or ZBT SRAM interface, $\overline{ASADS}$/$\overline{ASRE}$ acts as $\overline{ASADS}$ with deselect cycles (R_ENABLE = 0). For FIFO interface, $\overline{ASADS}$/$\overline{ASRE}$ acts as $\overline{ASRE}$ with NO deselect cycles (R_ENABLE = 1).

Copyright © 2006–2012, Texas Instruments Incorporated

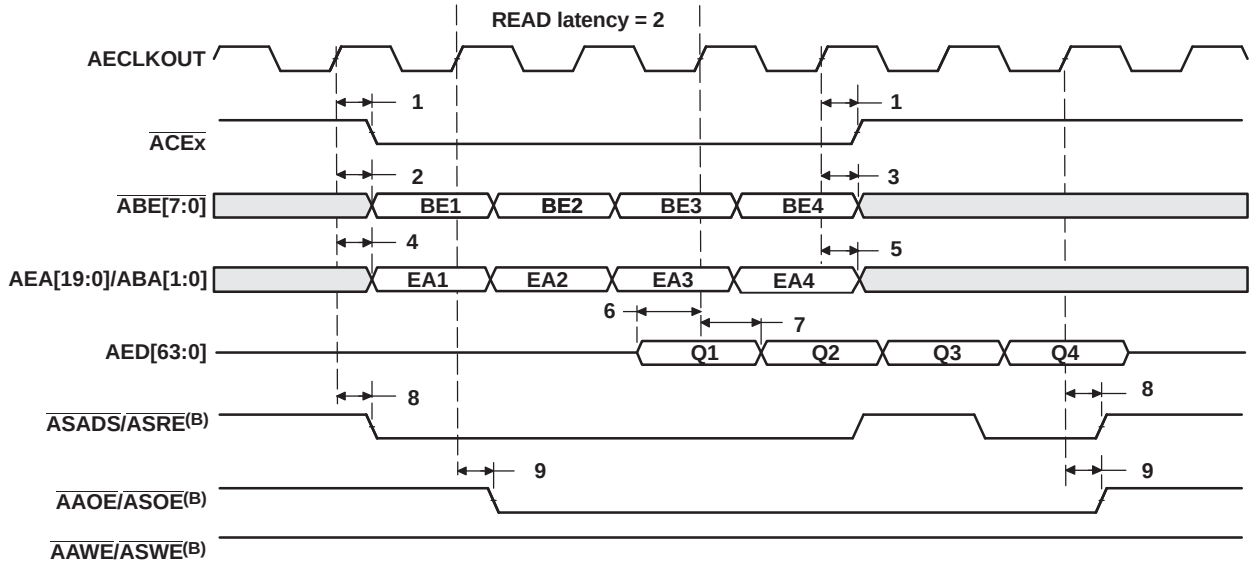

A The following parameters are programmable via the EMIFA Chip Select n Configuration Register (CESECn):
- Read latency (R_LTNCY): 1-, 2-, or 3-cycle read latency
- Write latency (W_LTNCY): 0-, 1-, 2-, or 3-cycle write latency
- ACEx assertion length (CE_EXT): For standard SBSRAM or ZBT SRAM interface, ACEx goes inactive after the final command has been issued (CE_EXT = 0). For synchronous FIFO interface, ACEx is active when ASOE is active (CE_EXT = 1).
- Function of ASADS/ASRE (R_ENABLE): For standard SBSRAM or ZBT SRAM interface, ASADS/ASRE acts as ASADS with deselect cycles (R_ENABLE = 0). For FIFO interface, ASADS/ASRE acts as SRE with NO deselect cycles (R_ENABLE = 1).
- In this figure R_LTNCY = 2, CE_EXT = 0, R_ENABLE = 0, and SSEL = 1.

B AAOE/ASOE, and AAWE/ASWE operate as ASOE, and ASWE, respectively, during programmable synchronous interface accesses.

Figure 7-36. Programmable Synchronous Interface Read Timing for EMIFA (With Read Latency = 2)(A)

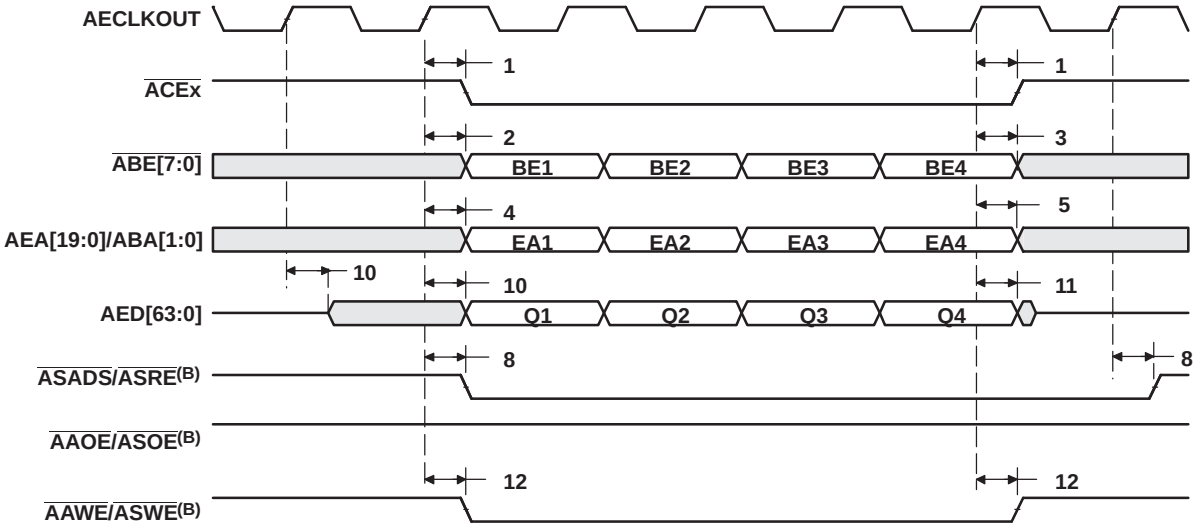

A The following parameters are programmable via the EMIFA Chip Select n Configuration Register (CESECn):
- Read latency (R_LTNCY): 1-, 2-, or 3-cycle read latency
- Write latency (W_LTNCY): 0-, 1-, 2-, or 3-cycle write latency
- ACEx assertion length (CE_EXT): For standard SBSRAM or ZBT SRAM interface, ACEx goes inactive after the final command has been issued (CE_EXT = 0). For synchronous FIFO interface, ACEx is active when ASOE is active (CE_EXT = 1).
- Function of ASADS/ASRE (R_ENABLE): For standard SBSRAM or ZBT SRAM interface, ASADS/ASRE acts as ASADS with deselect cycles (R_ENABLE = 0). For FIFO interface, ASADS/ASRE acts as SRE with NO deselect cycles (R_ENABLE = 1).
- In this figure W_LTNCY = 0, CE_EXT = 0, R_ENABLE = 0, and SSEL = 1.

B AAOE/ASOE, and AAWE/ASWE operate as ASOE, and ASWE, respectively, during programmable synchronous interface accesses.

Figure 7-37. Programmable Synchronous Interface Write Timing for EMIFA (With Write Latency = 0)(A)

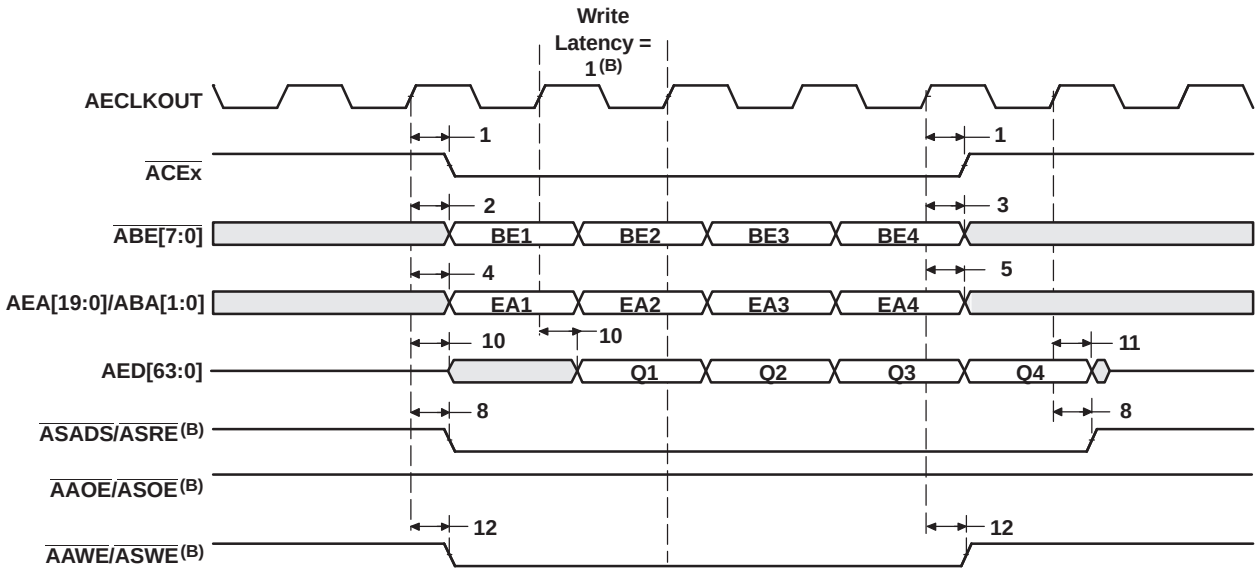

A The following parameters are programmable via the EMIFA Chip Select n Configuration Register (CESECn):
- Read latency (R_LTNCY): 1-, 2-, or 3-cycle read latency
- Write latency (W_LTNCY): 0-, 1-, 2-, or 3-cycle write latency
- ACEx assertion length (CE_EXT): For standard SBSRAM or ZBT SRAM interface, ACEx goes inactive after the final command has been issued (CE_EXT = 0). For synchronous FIFO interface, ACEx is active when ASOE is active (CE_EXT = 1).
- Function of ASADS/ASRE (R_ENABLE): For standard SBSRAM or ZBT SRAM interface, ASADS/ASRE acts as ASADS with deselect cycles (R_ENABLE = 0). For FIFO interface, ASADS/ASRE acts as SRE with NO deselect cycles (R_ENABLE = 1).
- In this figure W_LTNCY = 1, CE_EXT = 0, R_ENABLE = 0, and SSEL = 1.

B AAOE/ASOE, and AAWE/ASWE operate as ASOE, and ASWE, respectively, during programmable synchronous interface accesses.

Figure 7-38. Programmable Synchronous Interface Write Timing for EMIFA (With Write Latency = 1) (A)

Copyright © 2006–2012, Texas Instruments Incorporated

7.10.4 $\overline{HOLD}$/$\overline{HOLDA}$ Timing

Table 7-48. Timing Requirements for the $\overline{HOLD}$/$\overline{HOLDA}$ Cycles for EMIFA Module(1)

(see Figure 7-39)

NO.			-720 -850 A-1000/-1000		UNIT
			MIN	MAX	
3	$t_{h(HOLDAL-HOLDL)}$	Hold time, $\overline{HOLD}$ low after $\overline{HOLDA}$ low	E		ns

(1) E = the EMIF input clock (ECLKIN) period in ns for EMIFA.

Table 7-49. Switching Characteristics Over Recommended Operating Conditions for the $\overline{HOLD}$/$\overline{HOLDA}$ Cycles for EMIFA Module(1) (2)

(see Figure 7-39)

NO.	PARAMETER		-720 -850 A-1000/-1000		UNIT
			MIN	MAX	
1	$t_{d(HOLDL-EMHZ)}$	Delay time, $\overline{HOLD}$ low to EMIFA Bus high impedance	2E	(3)	ns
2	$t_{d(EMHZ-HOLDAL)}$	Delay time, EMIF Bus high impedance to $\overline{HOLDA}$ low	0	2E	ns
4	$t_{d(HOLDH-EMLZ)}$	Delay time, $\overline{HOLD}$ high to EMIF Bus low impedance	2E	7E	ns
5	$t_{d(EMLZ-HOLDAH)}$	Delay time, EMIFA Bus low impedance to $\overline{HOLDA}$ high	0	2E	ns

(1) E = the EMIF input clock (ECLKIN) period in ns for EMIFA.
(2) EMIFA Bus consists of: $\overline{ACE}$[5:2], $\overline{ABE}$[7:0], AED[63:0], AEA[19:0], ABA[1:0], AR/$\overline{W}$, $\overline{ASADS}$/$\overline{ASRE}$, $\overline{AAOE}$/ $\overline{ASOE}$, and $\overline{AAWE}$/$\overline{ASWE}$.
(3) All pending EMIF transactions are allowed to complete before $\overline{HOLDA}$ is asserted. If no bus transactions are occurring, then the minimum delay time can be achieved.

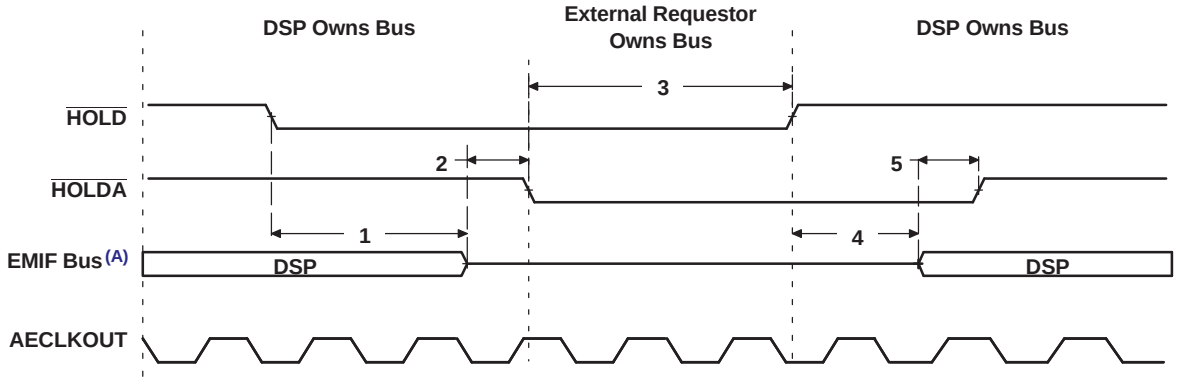

A. EMIFA Bus consists of: $\overline{ACE}$[5:2], $\overline{ABE}$[7:0], AED[63:0], AEA[19:0], ABA[1:0], AR/$\overline{W}$, $\overline{ASADS}$/$\overline{ASRE}$, $\overline{AAOE}$/ $\overline{ASOE}$, and $\overline{AAWE}$/$\overline{ASWE}$.

Figure 7-39. $\overline{HOLD}$/$\overline{HOLDA}$ Timing for EMIFA

7.10.5 BUSREQ Timing

Table 7-50. Switching Characteristics Over Recommended Operating Conditions for the BUSREQ Cycles for EMIFA Module

(see Figure 7-40)

NO.	PARAMETER		-720 -850 A-1000/-1000		UNIT
			MIN	MAX	
1	$t_{d(AEKOH-ABUSRV)}$	Delay time, AECLKOUT high to ABUSREQ valid	1	5.5	ns

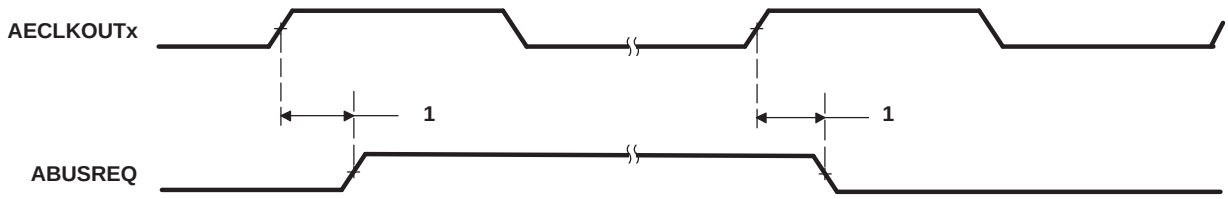

Figure 7-40. BUSREQ Timing for EMIFA

Copyright © 2006–2012, Texas Instruments Incorporated

7.11 I2C Peripheral

The inter-integrated circuit (I2C) module provides an interface between a C64x+ DSP and other devices compliant with Philips Semiconductors Inter-IC bus (I2C bus™) specification version 2.1 and connected by way of an I2C bus. External components attached to this 2-wire serial bus can transmit/receive up to 8-bit data to/from the DSP through the I2C module.

7.11.1 I2C Device-Specific Information

The C6454 device includes an I2C peripheral module (I2C). NOTE: when using the I2C module, ensure there are external pullup resistors on the SDA and SCL pins.

The I2C modules on the C6454 device may be used by the DSP to control local peripherals ICs (DACs, ADCs, etc.) or may be used to communicate with other controllers in a system or to implement a user interface.

The I2C port supports:

- Compatible with Philips I2C Specification Revision 2.1 (January 2000)
- Fast Mode up to 400 Kbps (no fail-safe I/O buffers)
- Noise Filter to remove noise 50 ns or less
- 7- and 10-Bit Device Addressing Modes
- Multi-Master (Transmit/Receive) and Slave (Transmit/Receive) Functionality
- Events: DMA, Interrupt, or Polling
- Slew-Rate Limited Open-Drain Output Buffers

Figure 7-41 is a block diagram of the I2C module.

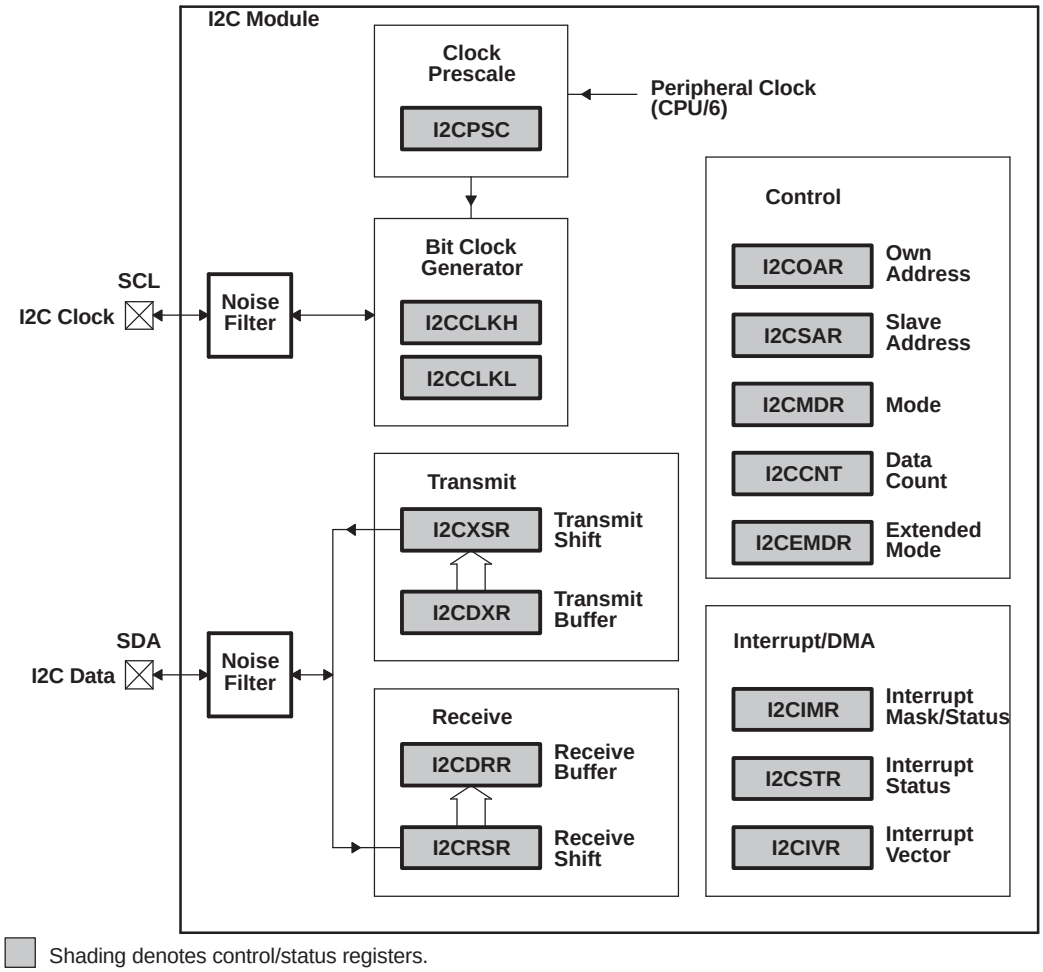

Figure 7-41. I2C Module Block Diagram

Copyright © 2006–2012, Texas Instruments Incorporated

7.11.2 I2C Peripheral Register Descriptions

Table 7-51. I2C Registers

HEX ADDRESS RANGE	ACRONYM	REGISTER NAME
02B0 4000	ICOAR	I2C own address register
02B0 4004	ICIMR	I2C interrupt mask/status register
02B0 4008	ICSTR	I2C interrupt status register
02B0 400C	ICCLKL	I2C clock low-time divider register
02B0 4010	ICCLKH	I2C clock high-time divider register
02B0 4014	ICCNT	I2C data count register
02B0 4018	ICDRR	I2C data receive register
02B0 401C	ICSAR	I2C slave address register
02B0 4020	ICDXR	I2C data transmit register
02B0 4024	ICMDR	I2C mode register
02B0 4028	ICIVR	I2C interrupt vector register
02B0 402C	ICEMDR	I2C extended mode register
02B0 4030	ICPSC	I2C prescaler register
02B0 4034	ICPID1	I2C peripheral identification register 1 [Value: 0x0000 0105]
02B0 4038	ICPID2	I2C peripheral identification register 2 [Value: 0x0000 0005]
02B0 403C - 02B0 405C	-	Reserved
02B0 4060 - 02B3 407F	-	Reserved
02B0 4080 - 02B3 FFFF	-	Reserved

Copyright © 2006–2012, Texas Instruments Incorporated

7.11.3 I2C Electrical Data/Timing

Table 7-52. Timing Requirements for I2C Timings[(1)]

(see Figure 7-42)

NO.			-720 -850 A-1000/-1000				UNIT
			STANDARD MODE		FAST MODE		
			MIN	MAX	MIN	MAX	
1	$t_{c(SCL)}$	Cycle time, SCL	10		2.5		µs
2	$t_{su(SCLH-SDAL)}$	Setup time, SCL high before SDA low (for a repeated START condition)	4.7		0.6		µs
3	$t_{h(SCLL-SDAL)}$	Hold time, SCL low after SDA low (for a START and a repeated START condition)	4		0.6		µs
4	$t_{w(SCLL)}$	Pulse duration, SCL low	4.7		1.3		µs
5	$t_{w(SCLH)}$	Pulse duration, SCL high	4		0.6		µs
6	$t_{su(SDAV-SDLH)}$	Setup time, SDA valid before SCL high	250		100[(2)]		ns
7	$t_{h(SDA-SDLL)}$	Hold time, SDA valid after SCL low (For I²C bus™ devices)	0[(3)]		0[(3)]	0.9[(4)]	µs
8	$t_{w(SDAH)}$	Pulse duration, SDA high between STOP and START conditions	4.7		1.3		µs
9	$t_{r(SDA)}$	Rise time, SDA		1000	$20 + 0.1C_b$ [(5)]	300	ns
10	$t_{r(SCL)}$	Rise time, SCL		1000	$20 + 0.1C_b$ [(5)]	300	ns
11	$t_{f(SDA)}$	Fall time, SDA		300	$20 + 0.1C_b$ [(5)]	300	ns
12	$t_{f(SCL)}$	Fall time, SCL		300	$20 + 0.1C_b$ [(5)]	300	ns
13	$t_{su(SCLH-SDAH)}$	Setup time, SCL high before SDA high (for STOP condition)	4		0.6		µs
14	$t_{w(SP)}$	Pulse duration, spike (must be suppressed)			0	50	ns
15	C_b [(5)]	Capacitive load for each bus line		400		400	pF

(1) The I2C pins SDA and SCL do not feature fail-safe I/O buffers. These pins could potentially draw current when the device is powered down.
(2) A Fast-mode I²C-bus™ device can be used in a Standard-mode I²C-bus™ system, but the requirement $t_{su(SDA-SCLH)}$ ≥250 ns must then be met. This will automatically be the case if the device does not stretch the LOW period of the SCL signal. If such a device does stretch the LOW period of the SCL signal, it must output the next data bit to the SDA line t_r max + $t_{su(SDA-SCLH)}$ = 1000 + 250 = 1250 ns (according to the Standard-mode I²C-Bus Specification) before the SCL line is released.
(3) A device must internally provide a hold time of at least 300 ns for the SDA signal (referred to the V_{IHmin} of the SCL signal) to bridge the undefined region of the falling edge of SCL.
(4) The maximum $t_{h(SDA-SCLL)}$ has only to be met if the device does not stretch the low period [$t_{w(SCLL)}$] of the SCL signal.
(5) C_b = total capacitance of one bus line in pF. If mixed with HS-mode devices, faster fall-times are allowed.

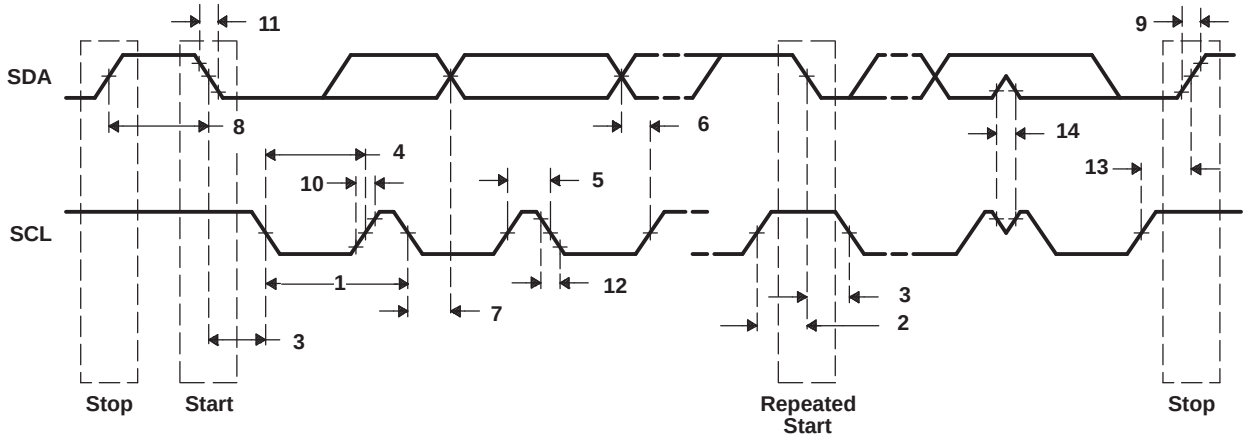

Figure 7-42. I2C Receive Timings

Copyright © 2006–2012, Texas Instruments Incorporated

Table 7-53. Switching Characteristics for I2C Timings[1]

(see Figure 7-43)

NO.	PARAMETER		-720 -850 A-1000/-1000				UNIT
			STANDARD MODE		FAST MODE		
			MIN	MAX	MIN	MAX	
16	$t_{c(SCL)}$	Cycle time, SCL	10		2.5		µs
17	$t_{d(SCLH-SDAL)}$	Delay time, SCL high to SDA low (for a repeated START condition)	4.7		0.6		µs
18	$t_{d(SDAL-SCLL)}$	Delay time, SDA low to SCL low (for a START and a repeated START condition)	4		0.6		µs
19	$t_{w(SCLL)}$	Pulse duration, SCL low	4.7		1.3		µs
20	$t_{w(SCLH)}$	Pulse duration, SCL high	4		0.6		µs
21	$t_{d(SDAV-SDLH)}$	Delay time, SDA valid to SCL high	250		100		ns
22	$t_{v(SDLL-SDAV)}$	Valid time, SDA valid after SCL low (for I2C bus devices)	0		0	0.9	µs
23	$t_{w(SDAH)}$	Pulse duration, SDA high between STOP and START conditions	4.7		1.3		µs
24	$t_{r(SDA)}$	Rise time, SDA		1000	$20 + 0.1C_b$ [2]	300	ns
25	$t_{r(SCL)}$	Rise time, SCL		1000	$20 + 0.1C_b$ [2]	300	ns
26	$t_{f(SDA)}$	Fall time, SDA		300	$20 + 0.1C_b$ [2]	300	ns
27	$t_{f(SCL)}$	Fall time, SCL		300	$20 + 0.1C_b$ [2]	300	ns
28	$t_{d(SCLH-SDAH)}$	Delay time, SCL high to SDA high (for STOP condition)	4		0.6		µs
29	C_p	Capacitance for each I2C pin		10		10	pF

(1) C_b = total capacitance of one bus line in pF. If mixed with HS-mode devices, faster fall-times are allowed.
(2) C_b = total capacitance of one bus line in pF. If mixed with HS-mode devices, faster fall-times are allowed.

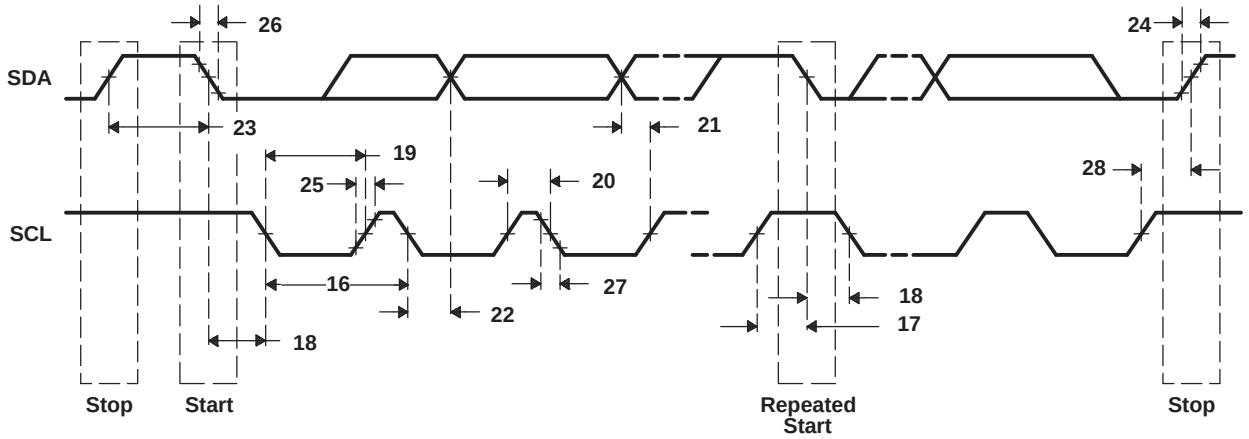

Figure 7-43. I2C Transmit Timings

7.12 Host-Port Interface (HPI) Peripheral

7.12.1 HPI Device-Specific Information

The C6454 device includes a user-configurable 16-bit or 32-bit Host-port interface (HPI16/HPI32). The AEA14 pin controls the HPI_WIDTH, allowing the user to configure the HPI as a 16-bit or 32-bit peripheral.

Software handshaking via the HRDY bit of the Host Port Control Register (HPIC) is not supported on the C6454 device.

An HPI boot is terminated using a DSP interrupt. The DSP interrupt is registered in bit 0 (channel 0) of the EDMA Event Register (ER). This event must be cleared by software before triggering transfers on DMA channel 0.

7.12.2 HPI Peripheral Register Descriptions

Table 7-54. HPI Control Registers

HEX ADDRESS RANGE	ACRONYM	REGISTER NAME	COMMENTS
0288 0000	-	Reserved	
0288 0004	PWREMU_MGMT	HPI power and emulation management register	The CPU has read/write access to the PWREMU_MGMT register; the Host does not have any access to this register.
0288 0008 - 0288 0024	-	Reserved	
0288 0028	-	Reserved	
0288 002C	-	Reserved	
0288 0030	HPIC	HPI control register	The Host and the CPU have read/write access to the HPIC register.(1)
0288 0034	HPIA (HPIAW)(2)	HPI address register (Write)	The Host has read/write access to the HPIA registers. The CPU has only read access to the HPIA registers.
0288 0038	HPIA (HPIAR)(2)	HPI address register (Read)	
0288 000C - 028B 007F	-	Reserved	
0288 0080 - 028B FFFF	-	Reserved	

(1) The CPU can write 1 to the $\overline{\text{HINT}}$ bit to generate an interrupt to the host and it can write 1 to the DSPINT bit to clear/acknowledge an interrupt from the host.

(2) There are two 32-bit HPIA registers: HPIAR for read operations and HPIAW for write operations. The HPI can be configured such that HPIAR and HPIAW act as a single 32-bit HPIA (single-HPIA mode) or as two separate 32-bit HPIAs (dual-HPIA mode) from the perspective of the host. The CPU can access HPIAW and HPIAR independently. For details about the HPIA registers and their modes, see the *TMS320C645x DSP Host Port Interface (HPI) User's Guide* (literature number SPRU969).

 Copyright © 2006–2012, Texas Instruments Incorporated

7.12.3 HPI Electrical Data/Timing

Table 7-55. Timing Requirements for Host-Port Interface Cycles[(1) (2)]

(see Figure 7-44 through Figure 7-51)

NO.			-720 -850 A-1000/-1000		UNIT
			MIN	MAX	
9	$t_{su(HASL-HSTBL)}$	Setup time, $\overline{HAS}$ low before $\overline{HSTROBE}$ low	5		ns
10	$t_{h(HSTBL-HASL)}$	Hold time, $\overline{HAS}$ low after $\overline{HSTROBE}$ low	2		ns
11	$t_{su(SELV-HASL)}$	Setup time, select signals[(3)] valid before $\overline{HAS}$ low	5		ns
12	$t_{h(HASL-SELV)}$	Hold time, select signals[(3)] valid after $\overline{HAS}$ low	5		ns
13	$t_{w(HSTBL)}$	Pulse duration, $\overline{HSTROBE}$ low	15		ns
14	$t_{w(HSTBH)}$	Pulse duration, $\overline{HSTROBE}$ high between consecutive accesses	2M		ns
15	$t_{su(SELV-HSTBL)}$	Setup time, select signals[(3)] valid before $\overline{HSTROBE}$ low	5		ns
16	$t_{h(HSTBL-SELV)}$	Hold time, select signals[(3)] valid after $\overline{HSTROBE}$ low	5		ns
17	$t_{su(HDV-HSTBH)}$	Setup time, host data valid before $\overline{HSTROBE}$ high	5		ns
18	$t_{h(HSTBH-HDV)}$	Hold time, host data valid after $\overline{HSTROBE}$ high	1		ns
37	$t_{su(HCSL-HSTBL)}$	Setup time, $\overline{HCS}$ low before $\overline{HSTROBE}$ low	0		ns
38	$t_{h(HRDYL-HSTBL)}$	Hold time, $\overline{HSTROBE}$ low after $\overline{HRDY}$ low. $\overline{HSTROBE}$ should not be inactivated until $\overline{HRDY}$ is active (low); otherwise, HPI writes will not complete properly.	1.1		ns

(1) $\overline{HSTROBE}$ refers to the following logical operation on $\overline{HCS}$, $\overline{HDS1}$, and $\overline{HDS2}$: [NOT($\overline{HDS1}$ XOR $\overline{HDS2}$)] OR $\overline{HCS}$.
(2) M = SYSCLK3 period = 6/CPU clock frequency in ns. For example, when running parts at 1000 MHz, use M = 6 ns.
(3) Select signals include: HCNTL[1:0] and HR/$\overline{W}$. For HPI16 mode only, select signals also include HHWIL.

Table 7-56. Switching Characteristics for Host-Port Interface Cycles[1] [2]

(see Figure 7-44 through Figure 7-51)

NO.	PARAMETER			-720 -850 A-1000/-1000 MIN	-720 -850 A-1000/-1000 MAX	UNIT
1	$t_{d(HSTBL-HDV)}$	Delay time, $\overline{HSTROBE}$ low to DSP data valid	Case 1. HPIC or HPIA read	5	15	ns
			Case 2. HPID read with no auto-increment[3]		9 * M + 20	
			Case 3. HPID read with auto-increment and read FIFO initially empty[3]		9 * M + 20	
			Case 4. HPID read with auto-increment and data previously prefetched into the read FIFO	5	15	
2	$t_{dis(HSTBH-HDV)}$	Disable time, HD high-impedance from $\overline{HSTROBE}$ high		1	4	ns
3	$t_{en(HSTBL-HD)}$	Enable time, HD driven from $\overline{HSTROBE}$ low		3	15	ns
4	$t_{d(HSTBL-HRDYH)}$	Delay time, $\overline{HSTROBE}$ low to $\overline{HRDY}$ high			12	ns
5	$t_{d(HSTBH-HRDYH)}$	Delay time, $\overline{HSTROBE}$ high to $\overline{HRDY}$ high			12	ns
6	$t_{d(HSTBL-HRDYL)}$	Delay time, $\overline{HSTROBE}$ low to $\overline{HRDY}$ low	Case 1. HPID read with no auto-increment[3]		10 * M + 20	ns
			Case 2. HPID read with auto-increment and read FIFO initially empty[3]		10 * M + 20	
7	$t_{d(HDV-HRDYL)}$	Delay time, HD valid to $\overline{HRDY}$ low		0		ns
34	$t_{d(DSH-HRDYL)}$	Delay time, $\overline{HSTROBE}$ high to $\overline{HRDY}$ low	Case 1. HPIA write[3]		5 * M + 20	ns
			Case 2. HPID write with no auto-increment[3]		5 * M + 20	
35	$t_{d(HSTBL-HRDYL)}$	Delay time, $\overline{HSTROBE}$ low to $\overline{HRDY}$ low for HPIA write and FIFO not empty[3]			40 * M + 20	ns
36	$t_{d(HASL-HRDYH)}$	Delay time, $\overline{HAS}$ low to $\overline{HRDY}$ high			12	ns

(1) M = SYSCLK3 period = 6/CPU clock frequency in ns. For example, when running parts at 1000 MHz, use M = 6 ns.
(2) $\overline{HSTROBE}$ refers to the following logical operation on $\overline{HCS}$, $\overline{HDS1}$, and $\overline{HDS2}$: [NOT($\overline{HDS1}$ XOR $\overline{HDS2}$)] OR $\overline{HCS}$.
(3) Assumes the HPI is accessing L2/L1 memory and no other master is accessing the same memory location.

Copyright © 2006–2012, Texas Instruments Incorporated

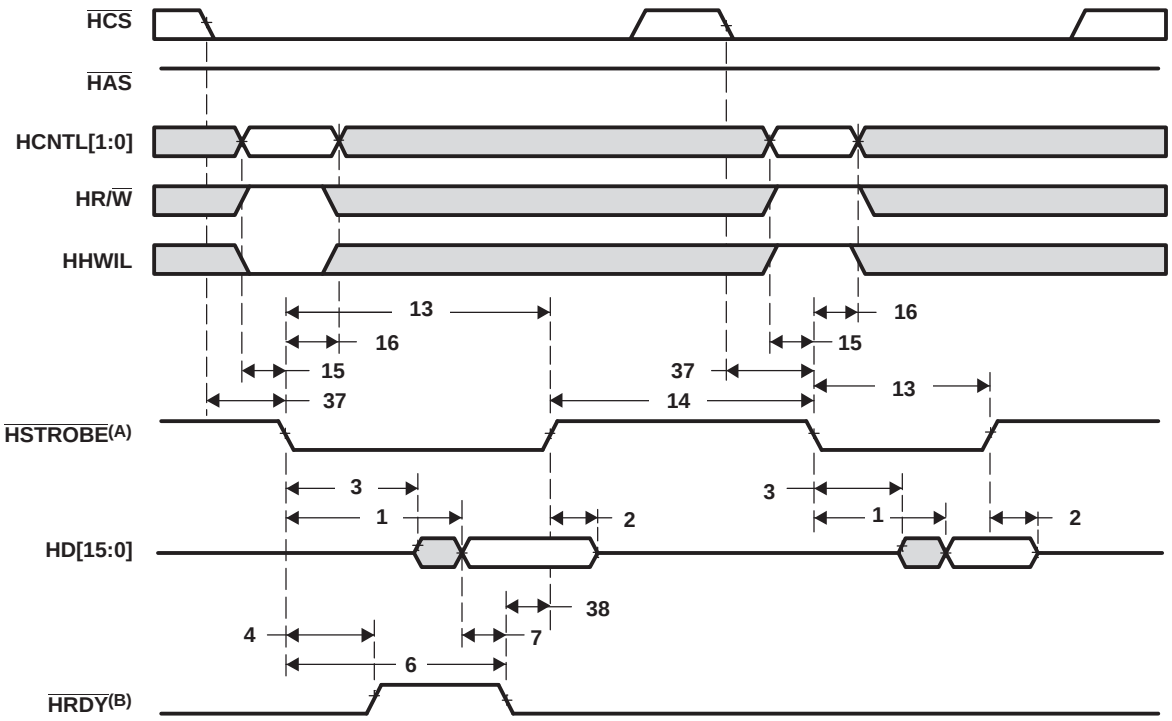

A. HSTROBE refers to the following logical operation on HCS, HDS1, and HDS2: [NOT(HDS1 XOR HDS2)] OR HCS.

B. Depending on the type of write or read operation (HPID without auto-incrementing; HPIA, HPIC, or HPID with auto-incrementing) and the state of the FIFO, transitions on HRDY may or may not occur. For more detailed information on the HPI peripheral, see the *TMS320C645x DSP Host Port Interface (HPI) User's Guide* (literature number SPRU969).

Figure 7-44. HPI16 Read Timing (HAS Not Used, Tied High)

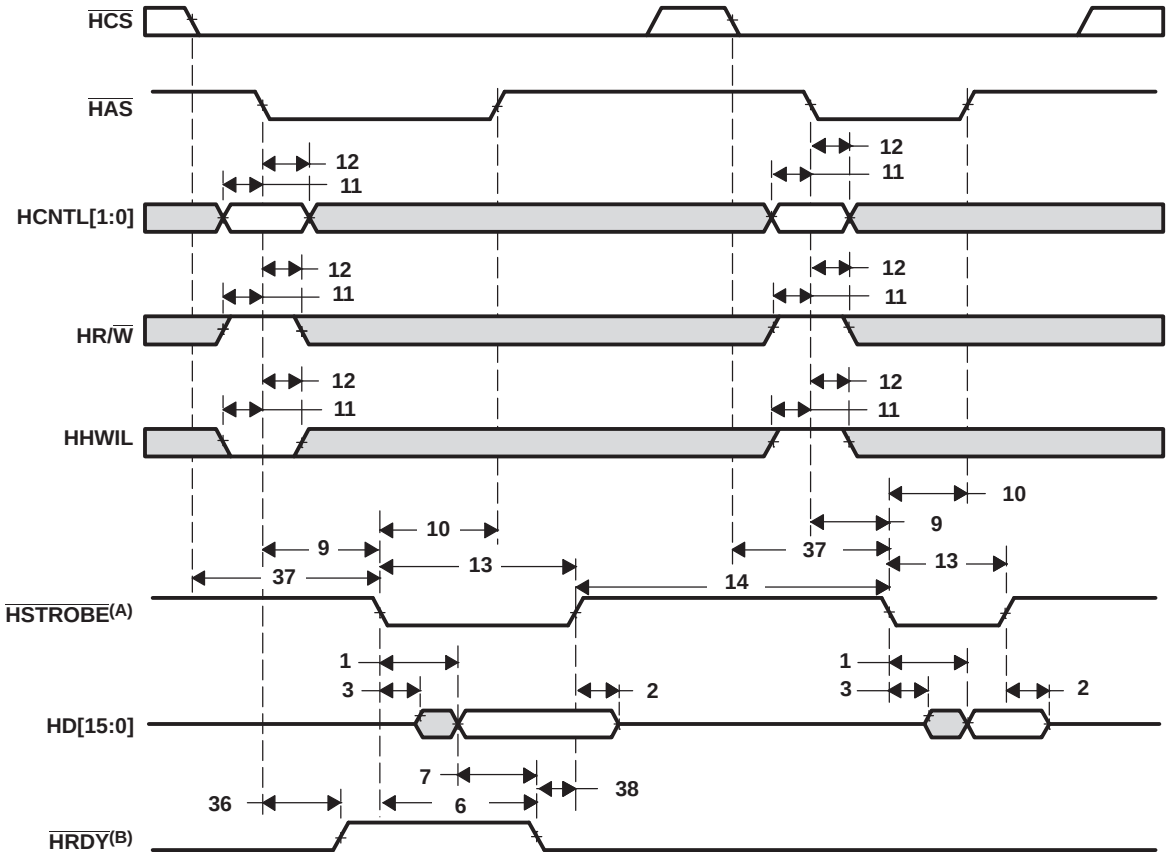

A. HSTROBE refers to the following logical operation on HCS, HDS1, and HDS2: [NOT(HDS1 XOR HDS2)] OR HCS.

B. Depending on the type of write or read operation (HPID without auto-incrementing; HPIA, HPIC, or HPID with auto-incrementing) and the state of the FIFO, transitions on HRDY may or may not occur. For more detailed information on the HPI peripheral, see the *TMS320C645x DSP Host Port Interface (HPI) User's Guide* (literature number SPRU969).

Figure 7-45. HPI16 Read Timing (HAS Used)

Copyright © 2006–2012, Texas Instruments Incorporated

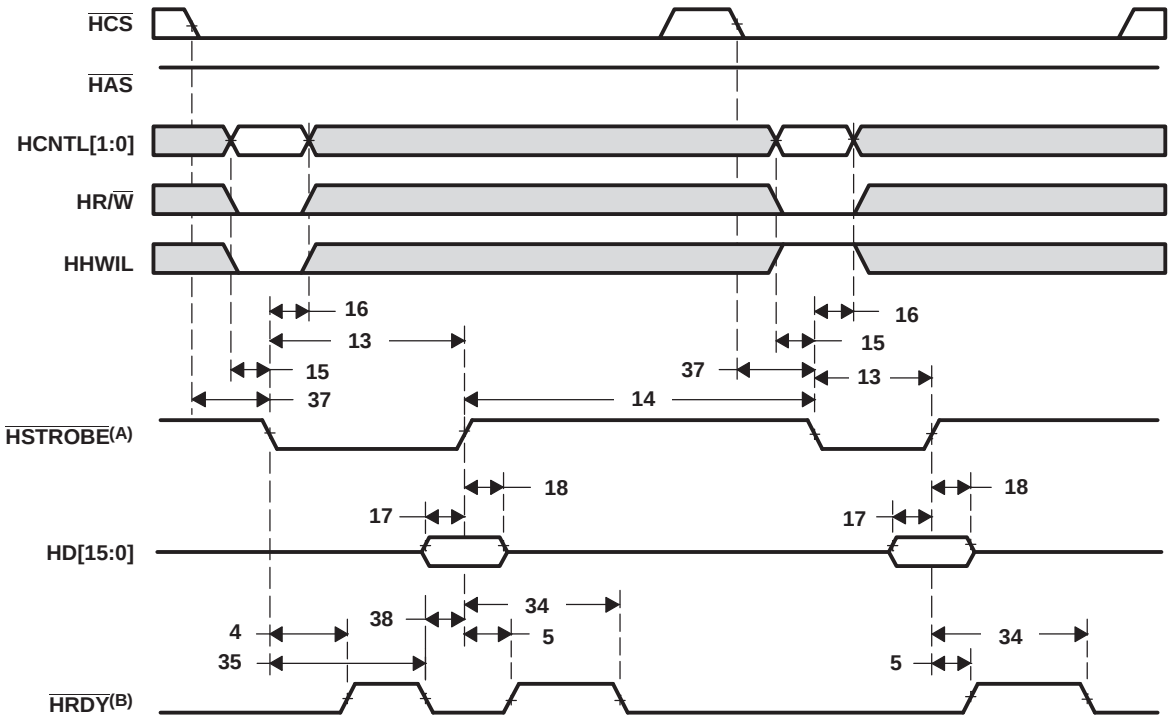

A. HSTROBE refers to the following logical operation on HCS, HDS1, and HDS2: [NOT(HDS1 XOR HDS2)] OR HCS.

B. Depending on the type of write or read operation (HPID without auto-incrementing; HPIA, HPIC, or HPID with auto-incrementing) and the state of the FIFO, transitions on HRDY may or may not occur. For more detailed information on the HPI peripheral, see the *TMS320C645x DSP Host Port Interface (HPI) User's Guide* (literature number SPRU969).

Figure 7-46. HPI16 Write Timing (HAS Not Used, Tied High)

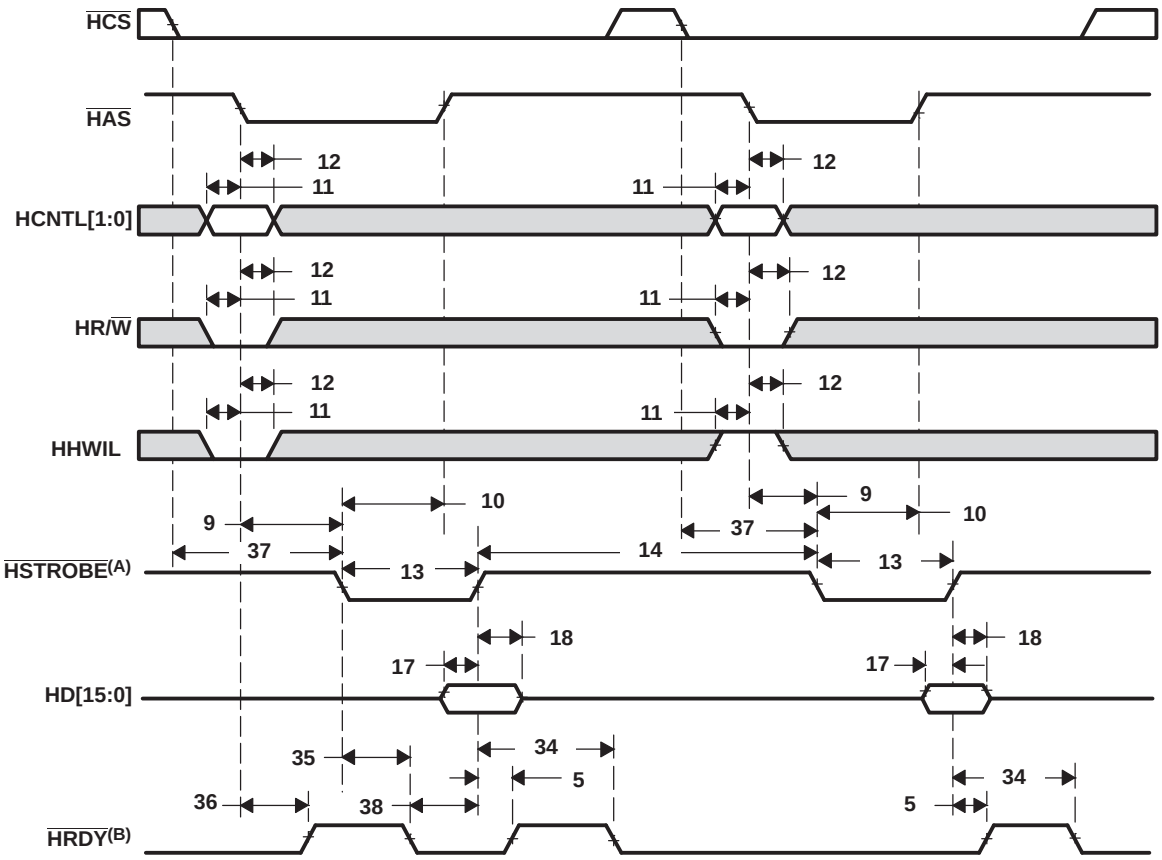

A. HSTROBE refers to the following logical operation on HCS, HDS1, and HDS2: [NOT(HDS1 XOR HDS2)] OR HCS.

B. Depending on the type of write or read operation (HPID without auto-incrementing; HPIA, HPIC, or HPID with auto-incrementing) and the state of the FIFO, transitions on HRDY may or may not occur. For more detailed information on the HPI peripheral, see the *TMS320C645x DSP Host Port Interface (HPI) User's Guide* (literature number SPRU969).

Figure 7-47. HPI16 Write Timing (HAS Used)

Copyright © 2006–2012, Texas Instruments Incorporated

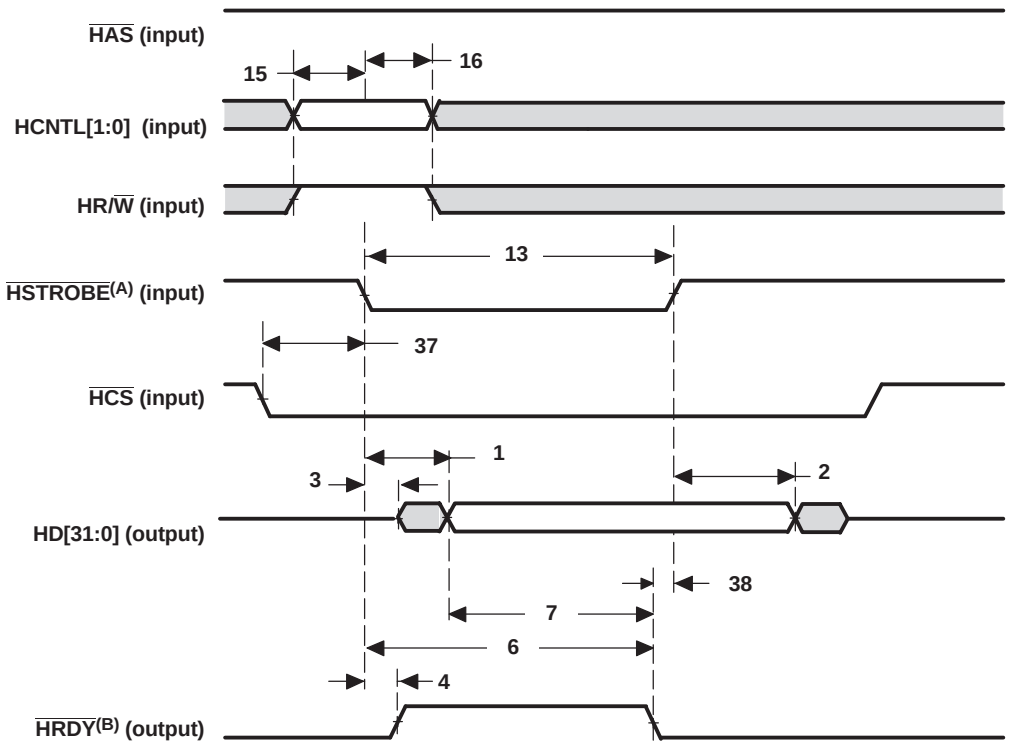

A. HSTROBE refers to the following logical operation on HCS, HDS1, and HDS2: [NOT(HDS1 XOR HDS2)] OR HCS.

B. Depending on the type of write or read operation (HPID without auto-incrementing; HPIA, HPIC, or HPID with auto-incrementing) and the state of the FIFO, transitions on HRDY may or may not occur. For more detailed information on the HPI peripheral, see the *TMS320C645x DSP Host Port Interface (HPI) User's Guide* (literature number SPRU969).

C. The timing $t_{w(HSTBH)}$, HSTROBE high pulse duration, must be met between consecutive HPI accesses in HPI32 mode.

Figure 7-48. HPI32 Read Timing (HAS Not Used, Tied High)

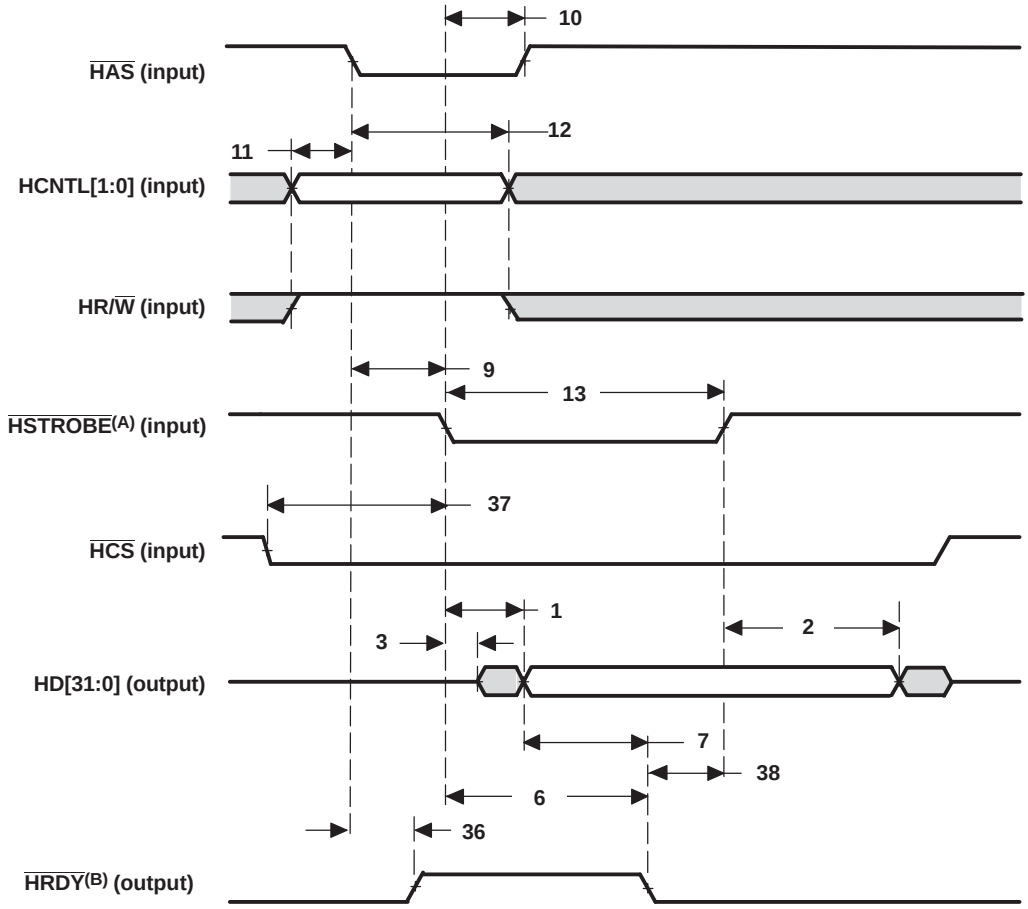

A. HSTROBE refers to the following logical operation on HCS, HDS1, and HDS2: [NOT(HDS1 XOR HDS2)] OR HCS.

B. Depending on the type of write or read operation (HPID without auto-incrementing; HPIA, HPIC, or HPID with auto-incrementing) and the state of the FIFO, transitions on HRDY may or may not occur. For more detailed information on the HPI peripheral, see the *TMS320C645x DSP Host Port Interface (HPI) User's Guide* (literature number SPRU969).

C. The timing $t_{w(HSTBH)}$, HSTROBE high pulse duration, must be met between consecutive HPI accesses in HPI32 mode.

Figure 7-49. HPI32 Read Timing (HAS Used)

Copyright © 2006–2012, Texas Instruments Incorporated

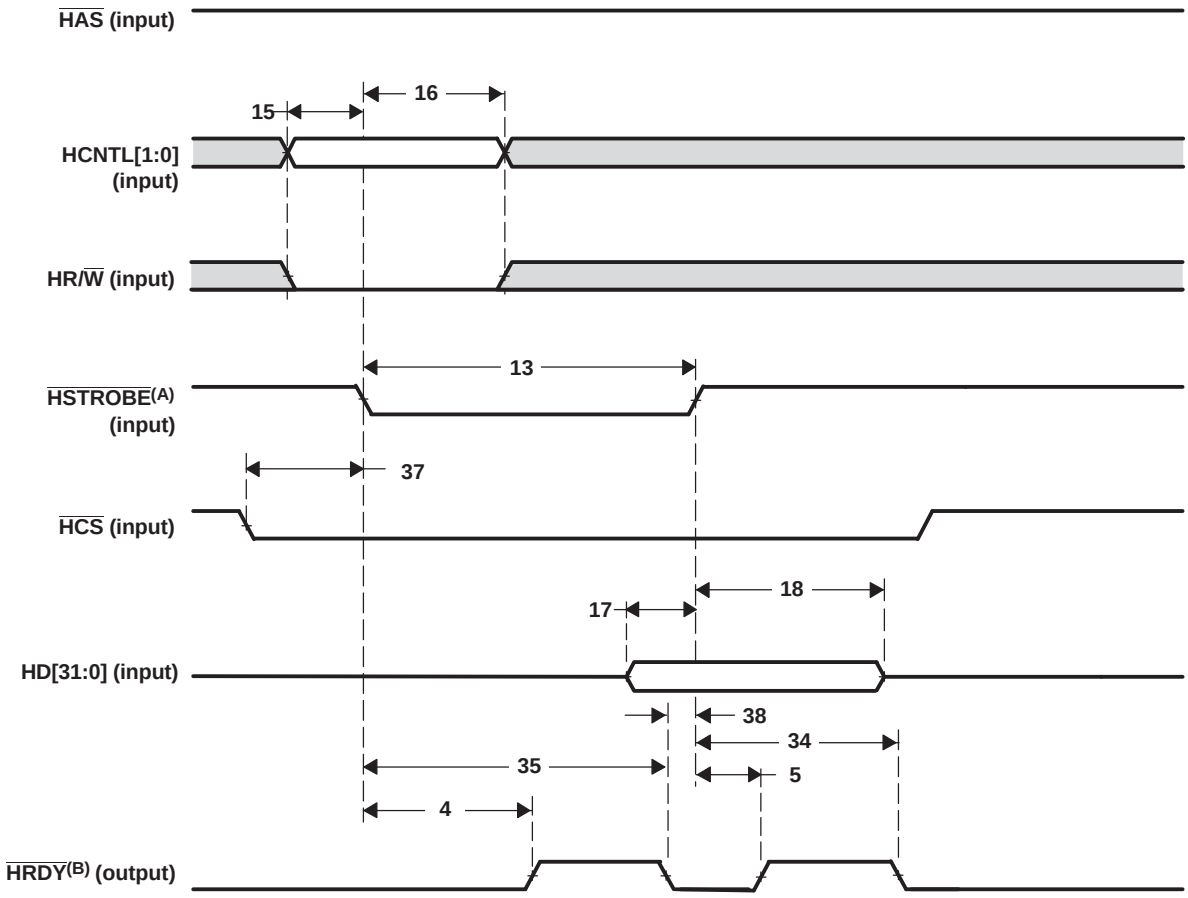

A. HSTROBE refers to the following logical operation on HCS, HDS1, and HDS2: [NOT(HDS1 XOR HDS2)] OR HCS.

B. Depending on the type of write or read operation (HPID without auto-incrementing; HPIA, HPIC, or HPID with auto-incrementing) and the state of the FIFO, transitions on HRDY may or may not occur. For more detailed information on the HPI peripheral, see the *TMS320C645x DSP Host Port Interface (HPI) User's Guide* (literature number SPRU969).

C. The timing $t_{w(HSTBH)}$, HSTROBE high pulse duration, must be met between consecutive HPI accesses in HPI32 mode.

Figure 7-50. HPI32 Write Timing (HAS Not Used, Tied High)

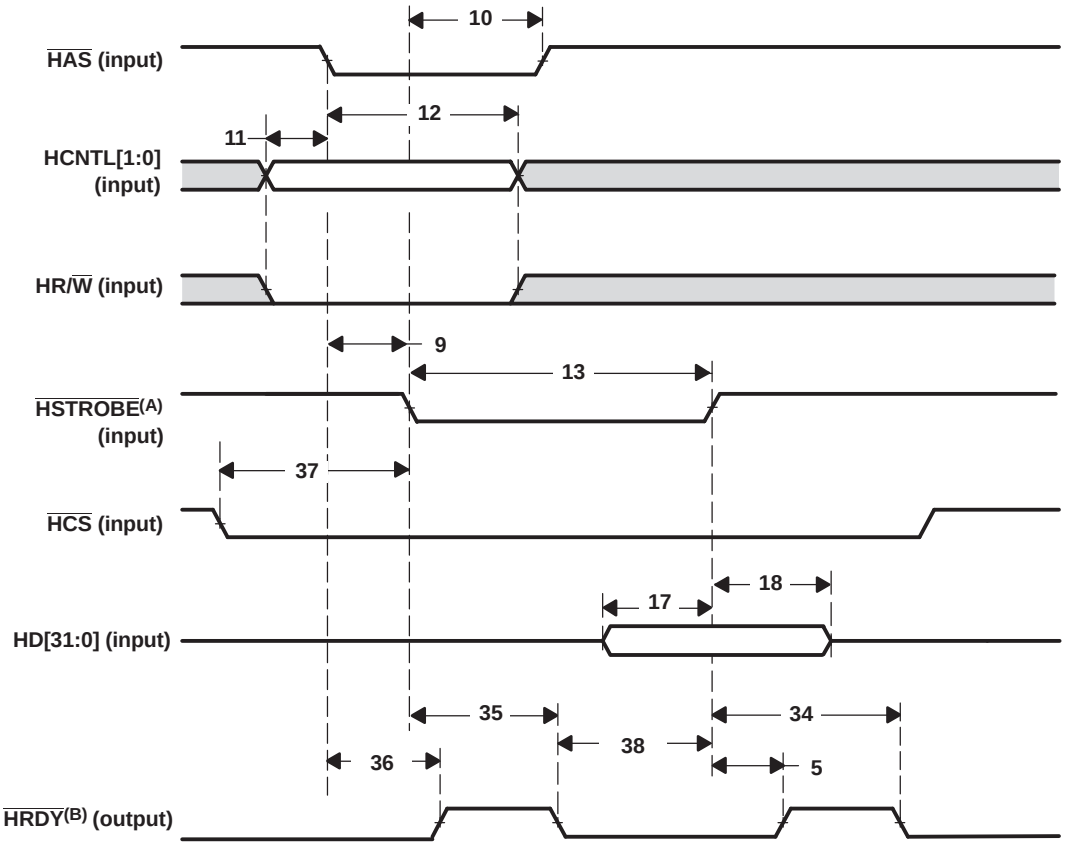

A. HSTROBE refers to the following logical operation on HCS, HDS1, and HDS2: [NOT(HDS1 XOR HDS2)] OR HCS.

B. Depending on the type of write or read operation (HPID without auto-incrementing; HPIA, HPIC, or HPID with auto-incrementing) and the state of the FIFO, transitions on HRDY may or may not occur. For more detailed information on the HPI peripheral, see the *TMS320C645x DSP Host Port Interface (HPI) User's Guide* (literature number SPRU969).

C. The timing $t_{w(HSTBH)}$, HSTROBE high pulse duration, must be met between consecutive HPI accesses in HPI32 mode.

Figure 7-51. HPI32 Write Timing (HAS Used)

Copyright © 2006–2012, Texas Instruments Incorporated

7.13 Multichannel Buffered Serial Port (McBSP)

The McBSP provides these functions:

- Full-duplex communication
- Double-buffered data registers, which allow a continuous data stream
- Independent framing and clocking for receive and transmit
- Direct interface to industry-standard codecs, analog interface chips (AICs), and other serially connected analog-to-digital (A/D) and digital-to-analog (D/A) devices
- External shift clock or an internal, programmable frequency shift clock for data transfer

For more detailed information on the McBSP peripheral, see the *TMS320C6000 DSP Multichannel Buffered Serial Port (McBSP) Reference Guide* (literature number SPRU580).

7.13.1 McBSP Device-Specific Information

The CLKS signal is shared by both McBSP0 and McBSP1 on this device. Also, the CLKGDV field of the Sample Rate Generator Register (SRGR) must always be set to a value of 1 or greater.

The McBSP Data Receive Register (DRR) and Data Transmit Register (DXR) can be accessed through two separate busses: a configuration bus and a data bus. Both paths can be used by the CPU and the EDMA. The data bus should be used to service the McBSP as this path provides better performance. However, since the data path shares a bridge with the PCI peripheral (see Figure 4-1), the configuration path should be used in cases where this peripheral is being used to avoid any performance degradation. Note that the PCI peripheral consists of an independent master and slave. Performance degradation is only a concern when this peripheral is used to initiate transactions on the external bus.

7.13.2 McBSP Peripheral Register Descriptions

Table 7-57. McBSP 0 Registers

HEX ADDRESS RANGE	ACRONYM	REGISTER NAME	COMMENTS
028C 0000	DRR0	McBSP0 Data Receive Register via Configuration Bus	The CPU and EDMA3 controller can only read this register; they cannot write to it.
3000 0000	DRR0	McBSP0 Data Receive Register via EDMA3 Bus	
028C 0004	DXR0	McBSP0 Data Transmit Register via Configuration Bus	
3000 0010	DXR0	McBSP0 Data Transmit Register via EDMA Bus	
028C 0008	SPCR0	McBSP0 Serial Port Control Register	
028C 000C	RCR0	McBSP0 Receive Control Register	
028C 0010	XCR0	McBSP0 Transmit Control Register	
028C 0014	SRGR0	McBSP0 Sample Rate Generator register	
028C 0018	MCR0	McBSP0 Multichannel Control Register	
028C 001C	RCERE00	McBSP0 Enhanced Receive Channel Enable Register 0 Partition A/B	
028C 0020	XCERE00	McBSP0 Enhanced Transmit Channel Enable Register 0 Partition A/B	
028C 0024	PCR0	McBSP0 Pin Control Register	
028C 0028	RCERE10	McBSP0 Enhanced Receive Channel Enable Register 1 Partition C/D	
028C 002C	XCERE10	McBSP0 Enhanced Transmit Channel Enable Register 1 Partition C/D	
028C 0030	RCERE20	McBSP0 Enhanced Receive Channel Enable Register 2 Partition E/F	
028C 0034	XCERE20	McBSP0 Enhanced Transmit Channel Enable Register 2 Partition E/F	
028C 0038	RCERE30	McBSP0 Enhanced Receive Channel Enable Register 3 Partition G/H	
028C 003C	XCERE30	McBSP0 Enhanced Transmit Channel Enable Register 3 Partition G/H	
028C 0040 - 028F FFFF	-	Reserved	

Copyright © 2006–2012, Texas Instruments Incorporated

Table 7-58. McBSP 1 Registers

HEX ADDRESS RANGE	ACRONYM	REGISTER NAME	COMMENTS
0290 0000	DRR1	McBSP1 Data Receive Register via Configuration Bus	The CPU and EDMA controller can only read this register; they cannot write to it.
3400 0000	DRR1	McBSP1 Data Receive Register via EDMA bus	
0290 0004	DXR1	McBSP1 Data Transmit Register via configuration bus	
3400 0010	DXR1	McBSP1 Data Transmit Register via EDMA bus	
0290 0008	SPCR1	McBSP1 serial port control register	
0290 000C	RCR1	McBSP1 Receive Control Register	
0290 0010	XCR1	McBSP1 Transmit Control Register	
0290 0014	SRGR1	McBSP1 sample rate generator register	
0290 0018	MCR1	McBSP1 multichannel control register	
0290 001C	RCERE01	McBSP1 Enhanced Receive Channel Enable Register 0 Partition A/B	
0290 0020	XCERE01	McBSP1 Enhanced Transmit Channel Enable Register 0 Partition A/B	
0290 0024	PCR1	McBSP1 Pin Control Register	
0290 0028	RCERE11	McBSP1 Enhanced Receive Channel Enable Register 1 Partition C/D	
0290 002C	XCERE11	McBSP1 Enhanced Transmit Channel Enable Register 1 Partition C/D	
0290 0030	RCERE21	McBSP1 Enhanced Receive Channel Enable Register 2 Partition E/F	
0290 0034	XCERE21	McBSP1 Enhanced Transmit Channel Enable Register 2 Partition E/F	
0290 0038	RCERE31	McBSP1 Enhanced Receive Channel Enable Register 3 Partition G/H	
0290 003C	XCERE31	McBSP1 Enhanced Transmit Channel Enable Register 3 Partition G/H	
0290 0040 - 0293 FFFF	-	Reserved	

Copyright © 2006–2012, Texas Instruments Incorporated

7.13.3 McBSP Electrical Data/Timing

Table 7-59. Timing Requirements for McBSP[1]

(see Figure 7-52)

NO.				-720 -850 A-1000/-1000 MIN	MAX	UNIT
2	$t_{c(CKRX)}$	Cycle time, CLKR/X	CLKR/X ext	6P or 10[2] [3]		ns
3	$t_{w(CKRX)}$	Pulse duration, CLKR/X high or CLKR/X low	CLKR/X ext	$0.5t_{c(CKRX)}$ - 1[4]		ns
5	$t_{su(FRH-CKRL)}$	Setup time, external FSR high before CLKR low	CLKR int	9		ns
			CLKR ext	1.3		
6	$t_{h(CKRL-FRH)}$	Hold time, external FSR high after CLKR low	CLKR int	6		ns
			CLKR ext	3		
7	$t_{su(DRV-CKRL)}$	Setup time, DR valid before CLKR low	CLKR int	8		ns
			CLKR ext	0.9		
8	$t_{h(CKRL-DRV)}$	Hold time, DR valid after CLKR low	CLKR int	3		ns
			CLKR ext	3.1		
10	$t_{su(FXH-CKXL)}$	Setup time, external FSX high before CLKX low	CLKX int	9		ns
			CLKX ext	1.3		
11	$t_{h(CKXL-FXH)}$	Hold time, external FSX high after CLKX low	CLKX int	6		ns
			CLKX ext	3		

(1) CLKRP = CLKXP = FSRP = FSXP = 0. If polarity of any of the signals is inverted, then the timing references of that signal are also inverted.
(2) P = 1/CPU clock frequency in ns. For example, when running parts at 1000 MHz, use P = 1 ns.
(3) Use whichever value is greater. Minimum CLKR/X cycle times *must* be met, even when CLKR/X is generated by an internal clock source. The minimum CLKR/X cycle times are based on internal logic speed; the maximum usable speed may be lower due to EDMA limitations and AC timing requirements.
(4) This parameter applies to the maximum McBSP frequency. Operate serial clocks (CLKR/X) in the reasonable range of 40/60 duty cycle.

Copyright © 2006–2012, Texas Instruments Incorporated

Table 7-60. Switching Characteristics Over Recommended Operating Conditions for McBSP[1] [2]

(see Figure 7-52)

NO.	PARAMETER			-720 -850 A-1000/-1000		UNIT
				MIN	MAX	
1	$t_{d(CKSH-CKRXH)}$	Delay time, CLKS high to CLKR/X high for internal CLKR/X generated from CLKS input[3]		1.4	10	ns
2	$t_{c(CKRX)}$	Cycle time, CLKR/X	CLKR/X int	6P or 10[4] [5] [6]		ns
3	$t_{w(CKRX)}$	Pulse duration, CLKR/X high or CLKR/X low	CLKR/X int	C - 1[7]	C + 1[7]	ns
4	$t_{d(CKRH-FRV)}$	Delay time, CLKR high to internal FSR valid	CLKR int	-2.1	3.3	ns
9	$t_{d(CKXH-FXV)}$	Delay time, CLKX high to internal FSX valid	CLKX int	-1.7	3	ns
			CLKX ext	1.7	9	
12	$t_{dis(CKXH-DXHZ)}$	Disable time, DX high impedance following last data bit from CLKX high	CLKX int	-3.9	4	ns
			CLKX ext	2.1	9	
13	$t_{d(CKXH-DXV)}$	Delay time, CLKX high to DX valid	CLKX int	-3.9 + D1[8]	4 + D2[8]	ns
			CLKX ext	2.1 + D1[8]	9 + D2[8]	
14	$t_{d(FXH-DXV)}$	Delay time, FSX high to DX valid ONLY applies when in data delay 0 (XDATDLY = 00b) mode	FSX int	-2.3 + D1[9]	5.6 + D2[9]	ns
			FSX ext	1.9 + D1[9]	9 + D2[9]	

(1) CLKRP = CLKXP = FSRP = FSXP = 0. If polarity of any of the signals is inverted, then the timing references of that signal are also inverted.
(2) Minimum delay times also represent minimum output hold times.
(3) The CLKS signal is shared by both McBSP0 and McBSP1 on this device.
(4) Minimum CLKR/X cycle times must be met, even when CLKR/X is generated by an internal clock source. Minimum CLKR/X cycle times are based on internal logic speed; the maximum usable speed may be lower due to EDMA limitations and AC timing requirements.
(5) P = 1/CPU clock frequency in ns. For example, when running parts at 1000 MHz, use P = 1 ns.
(6) Use whichever value is greater.
(7) C = H or L
S = sample rate generator input clock = 6P if CLKSM = 1 (P = 1/CPU clock frequency)
S = sample rate generator input clock = P_clks if CLKSM = 0 (P_clks = CLKS period)
H = CLKX high pulse width = (CLKGDV/2 + 1) * S if CLKGDV is even
H = (CLKGDV + 1)/2 * S if CLKGDV is odd
L = CLKX low pulse width = (CLKGDV/2) * S if CLKGDV is even
L = (CLKGDV + 1)/2 * S if CLKGDV is odd
CLKGDV should be set appropriately to ensure the McBSP bit rate does not exceed the maximum limit (see (4) above).
(8) Extra delay from CLKX high to DX valid **applies *only* to the first data bit of a device**, if and only if DXENA = 1 in SPCR.
if DXENA = 0, then D1 = D2 = 0
if DXENA = 1, then D1 = 6P, D2 = 12P
(9) Extra delay from FSX high to DX valid **applies *only* to the first data bit of a device**, if and only if DXENA = 1 in SPCR.
if DXENA = 0, then D1 = D2 = 0
if DXENA = 1, then D1 = 6P, D2 = 12P

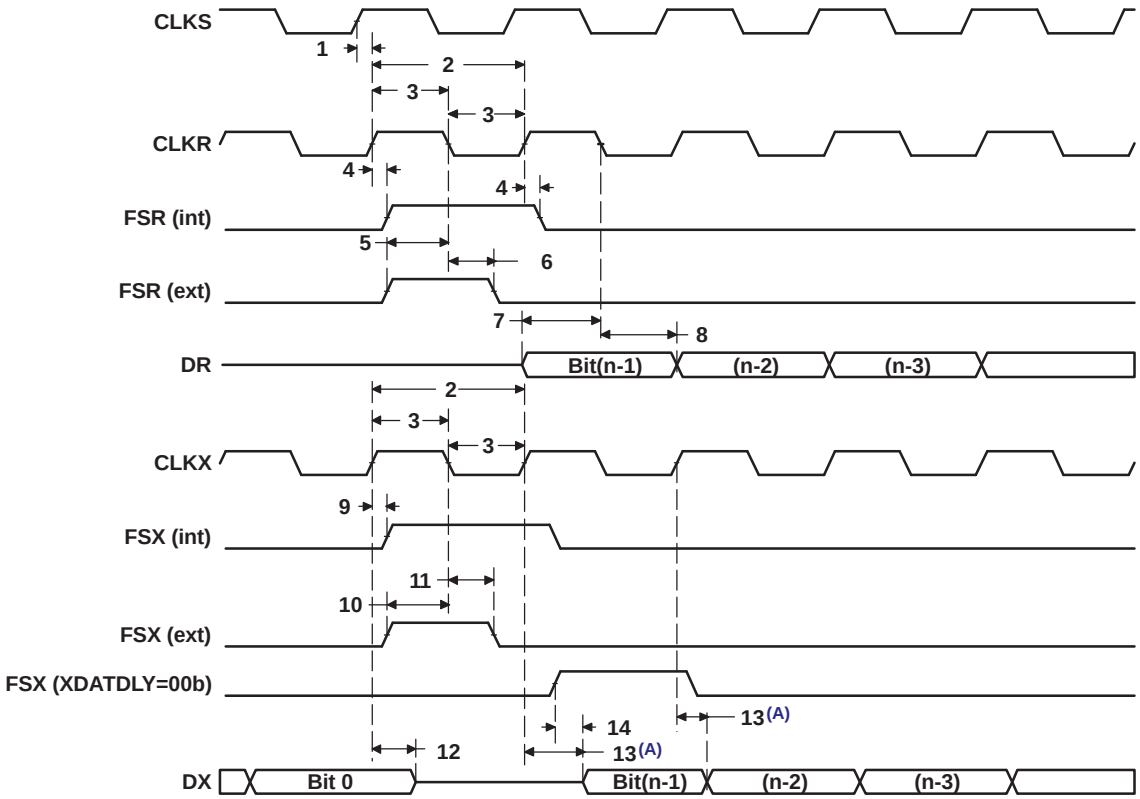

A. Parameter No. 13 applies to the first data bit *only* when XDATDLY ≠ 0.

B. The CLKS signal is shared by both McBSP0 and McBSP1 on this device.

Figure 7-52. McBSP Timing(B)

Copyright © 2006–2012, Texas Instruments Incorporated

Table 7-61. Timing Requirements for FSR When GSYNC = 1

(see Figure 7-53)

NO.			-720 -850 A-1000/-1000		UNIT
			MIN	MAX	
1	$t_{su(FRH-CKSH)}$	Setup time, FSR high before CLKS high	4		ns
2	$t_{h(CKSH-FRH)}$	Hold time, FSR high after CLKS high	4		ns

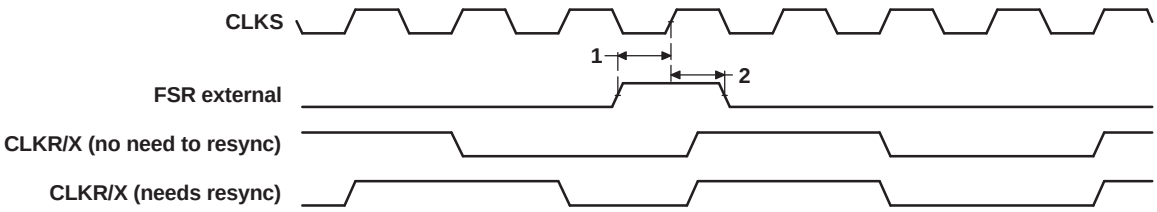

Figure 7-53. FSR Timing When GSYNC = 1

Table 7-62. Timing Requirements for McBSP as SPI Master or Slave: CLKSTP = 10b, CLKXP = 0 (1) (2)

(see Figure 7-54)

NO.			-720 -850 A-1000/-1000				UNIT
			MASTER		SLAVE		
			MIN	MAX	MIN	MAX	
4	$t_{su(DRV-CKXL)}$	Setup time, DR valid before CLKX low	12		2 - 18P		ns
5	$t_{h(CKXL-DRV)}$	Hold time, DR valid after CLKX low	4		5 + 36P		ns

(1) P = 1/CPU clock frequency in ns. For example, when running parts at 1000 MHz, use P = 1 ns.
(2) For all SPI Slave modes, CLKG is programmed as 1/6 of the CPU clock by setting CLKSM = CLKGDV = 1.

Table 7-63. Switching Characteristics Over Recommended Operating Conditions for McBSP as SPI Master or Slave: CLKSTP = 10b, CLKXP = 0[(1) (2)]

(see Figure 7-54)

NO.	PARAMETER		-720 -850 A-1000/-1000				UNIT
			MASTER[(3)]		SLAVE		
			MIN	MAX	MIN	MAX	
1	$t_{h(CKXL-FXL)}$	Hold time, FSX low after CLKX low[(4)]	T - 2	T + 3			ns
2	$t_{d(FXL-CKXH)}$	Delay time, FSX low to CLKX high[(5)]	L - 2	L + 3			ns
3	$t_{d(CKXH-DXV)}$	Delay time, CLKX high to DX valid	-2	4	18P + 2.8	30P + 17	ns
6	$t_{dis(CKXL-DXHZ)}$	Disable time, DX high impedance following last data bit from CLKX low	L - 2	L + 3			ns
7	$t_{dis(FXH-DXHZ)}$	Disable time, DX high impedance following last data bit from FSX high			6P + 3	18P + 17	ns
8	$t_{d(FXL-DXV)}$	Delay time, FSX low to DX valid			12P + 2	24P + 17	ns

(1) P = 1/CPU clock frequency in ns. For example, when running parts at 1000 MHz, use P = 1 ns.
(2) For all SPI Slave modes, CLKG is programmed as 1/6 of the CPU clock by setting CLKSM = CLKGDV = 1.
(3) S = Sample rate generator input clock = 6P if CLKSM = 1 (P = 1/CPU clock frequency)
S = Sample rate generator input clock = P_clks if CLKSM = 0 (P_clks = CLKS period)
T = CLKX period = (1 + CLKGDV) * S
H = CLKX high pulse width = (CLKGDV/2 + 1) * S if CLKGDV is even
H = (CLKGDV + 1)/2 * S if CLKGDV is odd
L = CLKX low pulse width = (CLKGDV/2) * S if CLKGDV is even
L = (CLKGDV + 1)/2 * S if CLKGDV is odd
(4) FSRP = FSXP = 1. As a SPI Master, FSX is inverted to provide active-low slave-enable output. As a Slave, the active-low signal input on FSX and FSR is inverted before being used internally.
CLKXM = FSXM = 1, CLKRM = FSRM = 0 for Master McBSP
CLKXM = CLKRM = FSXM = FSRM = 0 for Slave McBSP
(5) FSX should be low before the rising edge of clock to enable Slave devices and then begin a SPI transfer at the rising edge of the Master clock (CLKX).

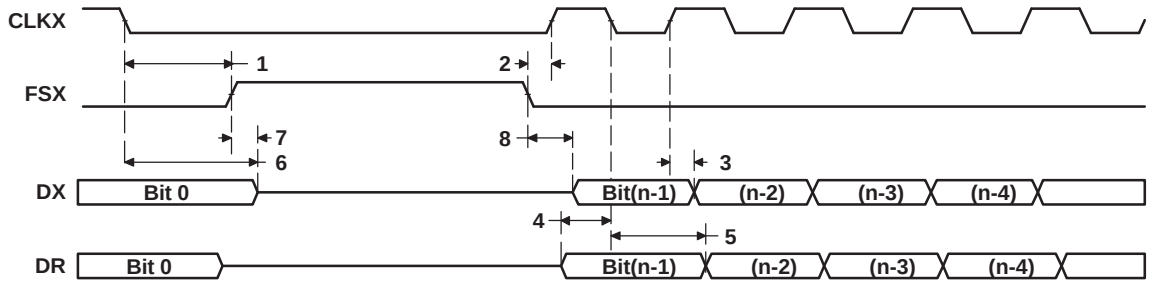

Figure 7-54. McBSP Timing as SPI Master or Slave: CLKSTP = 10b, CLKXP = 0

Copyright © 2006–2012, Texas Instruments Incorporated

Table 7-64. Timing Requirements for McBSP as SPI Master or Slave: CLKSTP = 11b, CLKXP = 0[(1) (2)]

(see Figure 7-55)

NO.			-720 -850 A-1000/-1000				UNIT
			MASTER		SLAVE		
			MIN	MAX	MIN	MAX	
4	$t_{su(DRV-CKXH)}$	Setup time, DR valid before CLKX high	12		2 - 18P		ns
5	$t_{h(CKXH-DRV)}$	Hold time, DR valid after CLKX high	4		5 + 36P		ns

(1) P = 1/CPU clock frequency in ns. For example, when running parts at 1000 MHz, use P = 1 ns.
(2) For all SPI Slave modes, CLKG is programmed as 1/6 of the CPU clock by setting CLKSM = CLKGDV = 1.

Table 7-65. Switching Characteristics Over Recommended Operating Conditions for McBSP as SPI Master or Slave: CLKSTP = 11b, CLKXP = 0[1] [2]

(see Figure 7-55)

NO.	PARAMETER		-720 -850 A-1000/-1000				UNIT
			MASTER[3]		SLAVE		
			MIN	MAX	MIN	MAX	
1	$t_{h(CKXL-FXL)}$	Hold time, FSX low after CLKX low[4]	L - 2	L + 3			ns
2	$t_{d(FXL-CKXH)}$	Delay time, FSX low to CLKX high[5]	T - 2	T + 3			ns
3	$t_{d(CKXL-DXV)}$	Delay time, CLKX low to DX valid	-2	4	18P + 2.8	30P + 17	ns
6	$t_{dis(CKXL-DXHZ)}$	Disable time, DX high impedance following last data bit from CLKX low	-2	4	18P + 3	30P + 17	ns
7	$t_{d(FXL-DXV)}$	Delay time, FSX low to DX valid	H - 2	H + 4	12P + 2	24P + 17	ns

(1) P = 1/CPU clock frequency in ns. For example, when running parts at 1000 MHz, use P = 1 ns.
(2) For all SPI Slave modes, CLKG is programmed as 1/6 of the CPU clock by setting CLKSM = CLKGDV = 1.
(3) S = Sample rate generator input clock = 6P if CLKSM = 1 (P = 1/CPU clock frequency)
S = Sample rate generator input clock = P_clks if CLKSM = 0 (P_clks = CLKS period)
T = CLKX period = (1 + CLKGDV) * S
H = CLKX high pulse width = (CLKGDV/2 + 1) * S if CLKGDV is even
H = (CLKGDV + 1)/2 * S if CLKGDV is odd
L = CLKX low pulse width = (CLKGDV/2) * S if CLKGDV is even
L = (CLKGDV + 1)/2 * S if CLKGDV is odd
(4) FSRP = FSXP = 1. As a SPI Master, FSX is inverted to provide active-low slave-enable output. As a Slave, the active-low signal input on FSX and FSR is inverted before being used internally.
CLKXM = FSXM = 1, CLKRM = FSRM = 0 for Master McBSP
CLKXM = CLKRM = FSXM = FSRM = 0 for Slave McBSP
(5) FSX should be low before the rising edge of clock to enable Slave devices and then begin a SPI transfer at the rising edge of the Master clock (CLKX).

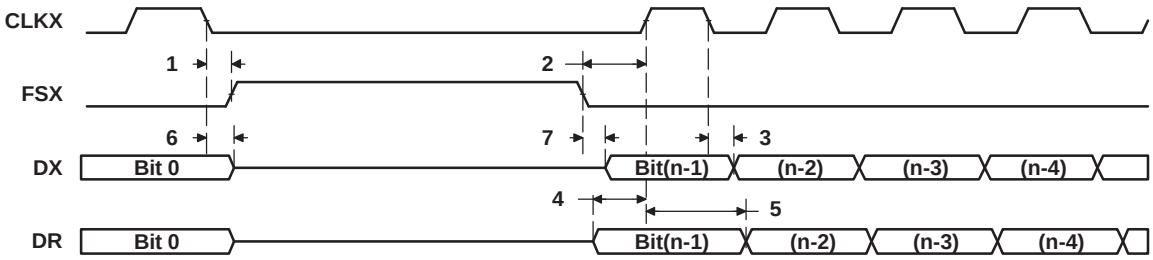

Figure 7-55. McBSP Timing as SPI Master or Slave: CLKSTP = 11b, CLKXP = 0

Copyright © 2006–2012, Texas Instruments Incorporated

Table 7-66. Timing Requirements for McBSP as SPI Master or Slave: CLKSTP = 10b, CLKXP = 1[(1) (2)]

(see Figure 7-56)

NO.			-720 -850 A-1000/-1000				UNIT
			MASTER		SLAVE		
			MIN	MAX	MIN	MAX	
4	$t_{su(DRV-CKXH)}$	Setup time, DR valid before CLKX high	12		2 - 18P		ns
5	$t_{h(CKXH-DRV)}$	Hold time, DR valid after CLKX high	4		5 + 36P		ns

(1) P = 1/CPU clock frequency in ns. For example, when running parts at 1000 MHz, use P = 1 ns.
(2) For all SPI Slave modes, CLKG is programmed as 1/6 of the CPU clock by setting CLKSM = CLKGDV = 1.

Table 7-67. Switching Characteristics Over Recommended Operating Conditions for McBSP as SPI Master or Slave: CLKSTP = 10b, CLKXP = 1[1] [2]

(see Figure 7-56)

NO.	PARAMETER		-720 -850 A-1000/-1000				UNIT
			MASTER[3]		SLAVE		
			MIN	MAX	MIN	MAX	
1	$t_{h(CKXH-FXL)}$	Hold time, FSX low after CLKX high[4]	T - 2	T + 3			ns
2	$t_{d(FXL-CKXL)}$	Delay time, FSX low to CLKX low[5]	H - 2	H + 3			ns
3	$t_{d(CKXL-DXV)}$	Delay time, CLKX low to DX valid	-2	4	18P + 2.8	30P + 17	ns
6	$t_{dis(CKXH-DXHZ)}$	Disable time, DX high impedance following last data bit from CLKX high	H - 2	H + 3			ns
7	$t_{dis(FXH-DXHZ)}$	Disable time, DX high impedance following last data bit from FSX high			6P + 3	18P + 17	ns
8	$t_{d(FXL-DXV)}$	Delay time, FSX low to DX valid			12P + 2	24P + 17	ns

(1) P = 1/CPU clock frequency in ns. For example, when running parts at 1000 MHz, use P = 1 ns.
(2) For all SPI Slave modes, CLKG is programmed as 1/6 of the CPU clock by setting CLKSM = CLKGDV = 1.
(3) S = Sample rate generator input clock = 6P if CLKSM = 1 (P = 1/CPU clock frequency)
S = Sample rate generator input clock = P_clks if CLKSM = 0 (P_clks = CLKS period)
T = CLKX period = (1 + CLKGDV) * S
H = CLKX high pulse width = (CLKGDV/2 + 1) * S if CLKGDV is even
H = (CLKGDV + 1)/2 * S if CLKGDV is odd
L = CLKX low pulse width = (CLKGDV/2) * S if CLKGDV is even
L = (CLKGDV + 1)/2 * S if CLKGDV is odd
(4) FSRP = FSXP = 1. As a SPI Master, FSX is inverted to provide active-low slave-enable output. As a Slave, the active-low signal input on FSX and FSR is inverted before being used internally.
CLKXM = FSXM = 1, CLKRM = FSRM = 0 for Master McBSP
CLKXM = CLKRM = FSXM = FSRM = 0 for Slave McBSP
(5) FSX should be low before the rising edge of clock to enable Slave devices and then begin a SPI transfer at the rising edge of the Master clock (CLKX).

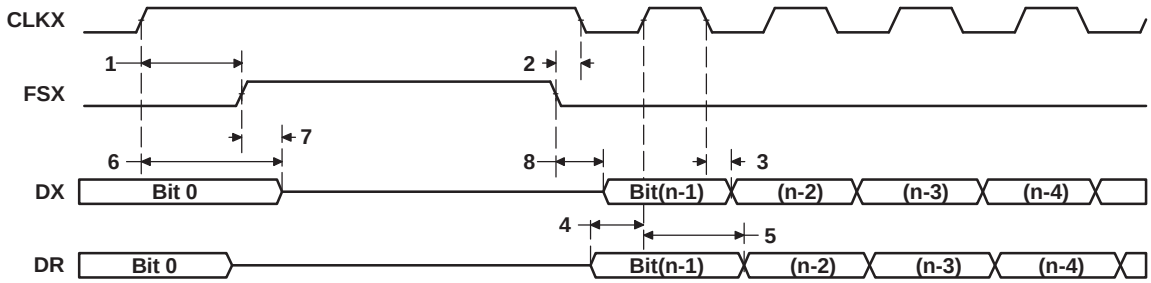

Figure 7-56. McBSP Timing as SPI Master or Slave: CLKSTP = 10b, CLKXP = 1

Copyright © 2006–2012, Texas Instruments Incorporated

Table 7-68. Timing Requirements for McBSP as SPI Master or Slave: CLKSTP = 11b, CLKXP = 1[(1) (2)]

(see Figure 7-57)

NO.			-720 -850 A-1000/-1000				UNIT
			MASTER		SLAVE		
			MIN	MAX	MIN	MAX	
4	$t_{su(DRV-CKXH)}$	Setup time, DR valid before CLKX high	12		2 - 18P		ns
5	$t_{h(CKXH-DRV)}$	Hold time, DR valid after CLKX high	4		5 + 36P		ns

(1) P = 1/CPU clock frequency in ns. For example, when running parts at 1000 MHz, use P = 1 ns.
(2) For all SPI Slave modes, CLKG is programmed as 1/6 of the CPU clock by setting CLKSM = CLKGDV = 1.

Table 7-69. Switching Characteristics Over Recommended Operating Conditions for McBSP as SPI Master or Slave: CLKSTP = 11b, CLKXP = 1[1] [2]

(see Figure 7-57)

NO.	PARAMETER		-720 -850 A-1000/-1000				UNIT
			MASTER[3]		SLAVE		
			MIN	MAX	MIN	MAX	
1	$t_{h(CKXH-FXL)}$	Hold time, FSX low after CLKX high[4]	H - 2	H + 3			ns
2	$t_{d(FXL-CKXL)}$	Delay time, FSX low to CLKX low[5]	T - 2	T + 1			ns
3	$t_{d(CKXH-DXV)}$	Delay time, CLKX high to DX valid	-2	4	18P + 2.8	30P + 17	ns
6	$t_{dis(CKXH-DXHZ)}$	Disable time, DX high impedance following last data bit from CLKX high	-2	4	18P + 3	30P + 17	ns
7	$t_{d(FXL-DXV)}$	Delay time, FSX low to DX valid	L - 2	L + 4	12P + 2	24P + 17	ns

(1) P = 1/CPU clock frequency in ns. For example, when running parts at 1000 MHz, use P = 1 ns.
(2) For all SPI Slave modes, CLKG is programmed as 1/6 of the CPU clock by setting CLKSM = CLKGDV = 1.
(3) S = Sample rate generator input clock = 6P if CLKSM = 1 (P = 1/CPU clock frequency)
S = Sample rate generator input clock = P_clks if CLKSM = 0 (P_clks = CLKS period)
T = CLKX period = (1 + CLKGDV) * S
H = CLKX high pulse width = (CLKGDV/2 + 1) * S if CLKGDV is even
H = (CLKGDV + 1)/2 * S if CLKGDV is odd
L = CLKX low pulse width = (CLKGDV/2) * S if CLKGDV is even
L = (CLKGDV + 1)/2 * S if CLKGDV is odd
(4) FSRP = FSXP = 1. As a SPI Master, FSX is inverted to provide active-low slave-enable output. As a Slave, the active-low signal input on FSX and FSR is inverted before being used internally.
CLKXM = FSXM = 1, CLKRM = FSRM = 0 for Master McBSP
CLKXM = CLKRM = FSXM = FSRM = 0 for Slave McBSP
(5) FSX should be low before the rising edge of clock to enable Slave devices and then begin a SPI transfer at the rising edge of the Master clock (CLKX).

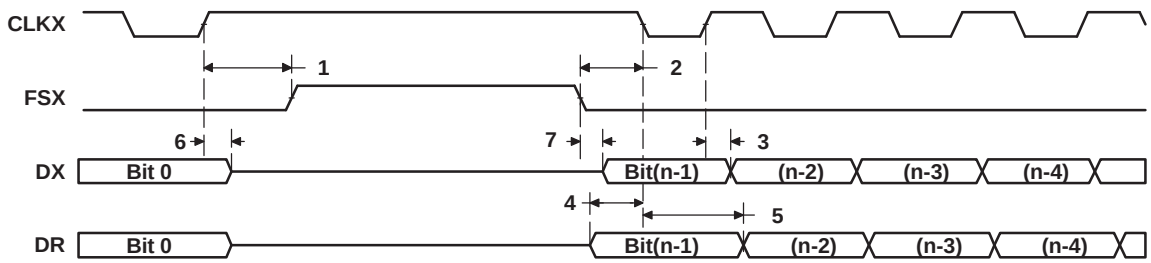

Figure 7-57. McBSP Timing as SPI Master or Slave: CLKSTP = 11b, CLKXP = 1

Copyright © 2006–2012, Texas Instruments Incorporated

7.14 Ethernet MAC (EMAC)

The Ethernet Media Access Controller (EMAC) module provides an efficient interface between the C6454 DSP core processor and the networked community. The EMAC supports 10Base-T (10 Mbits/second [Mbps]), and 100BaseTX (100 Mbps), in either half- or full-duplex mode, and 1000BaseT (1000 Mbps) in full-duplex mode, with hardware flow control and quality-of-service (QOS) support.

The EMAC module conforms to the IEEE 802.3-2002 standard, describing the "Carrier Sense Multiple Access with Collision Detection (CSMA/CD) Access Method and Physical Layer" specifications. The IEEE 802.3 standard has also been adopted by ISO/IEC and re-designated as ISO/IEC 8802-3:2000(E).

Deviation from this standard, the EMAC module does not use the Transmit Coding Error signal MTXER. Instead of driving the error pin when an underflow condition occurs on a transmitted frame, the EMAC will intentionally generate an incorrect checksum by inverting the frame CRC, so that the transmitted frame will be detected as an error by the network.

The EMAC control module is the main interface between the device core processor, the MDIO module, and the EMAC module. The relationship between these three components is shown in Figure 7-58. The EMAC control module contains the necessary components to allow the EMAC to make efficient use of device memory, plus it controls device interrupts. The EMAC control module incorporates 8K-bytes of internal RAM to hold EMAC buffer descriptors. The relationship between these three components is shown in Figure 7-58.

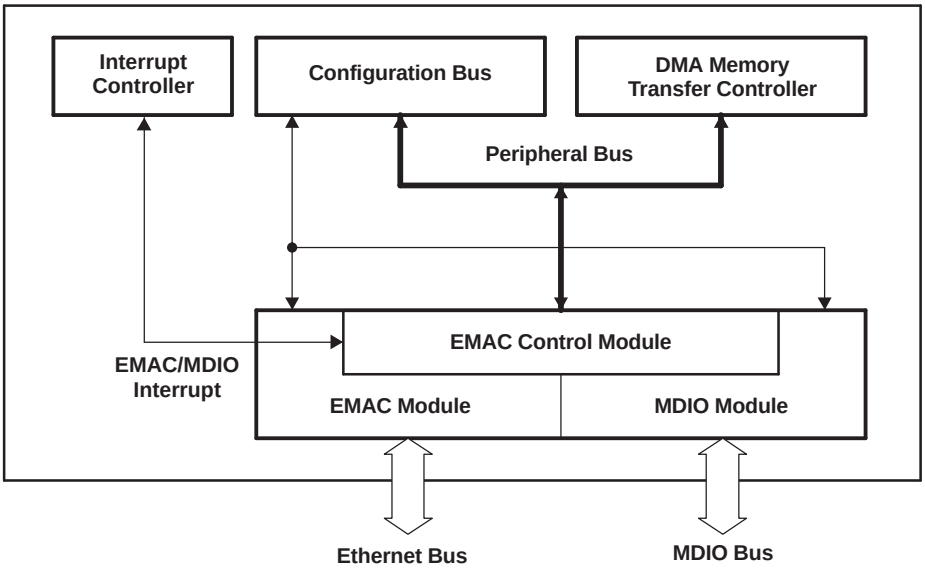

Figure 7-58. EMAC, MDIO, and EMAC Control Modules

For more detailed information on the EMAC/MDIO, see the *TMS320C645x DSP EMAC/MDIO Module Reference Guide* (literature number SPRU975).

7.14.1 EMAC Device-Specific Information

Interface Modes

The EMAC module on the TMS320C6454 device supports four interface modes: Media Independent Interface (MII), Reduced Media Independent Interface (RMII), Gigabit Media Independent Interface (GMII), and Reduced Gigabit Media Independent Interface (RGMII). The MII and GMII interface modes are defined in the IEEE 802.3-2002 standard.

The RGMII mode of the EMAC conforms to the Reduced Gigabit Media Independent Interface (RGMII) Specification (version 2.0). The RGMII mode implements the same functionality as the GMII mode, but with a reduced number of pins. Data and control information is transmitted and received using both edges of the transmit and receive clocks (TXC and RXC).

Note: The EMAC internally delays the transmit clock (TXC) with respect to the transmit data and control pins. Therefore, the EMAC conforms to the RGMII-ID operation of the RGMII specification. However, the EMAC does not delay the receive clock (RXC); this signal must be delayed with respect to the receive data and control pins outside of the DSP.

The RMII mode of the EMAC conforms to the RMII Specification (revision 1.2), as written by the RMII Consortium. As the name implies, the Reduced Media Independent Interface (RMII) mode is a reduced pin count version of the MII mode.

Interface Mode Select

The EMAC uses the same pins for the MII, GMII, and RMII modes. Standalone pins are included for the RGMII mode due to specific voltage requirements. Only one mode can be used at a time. The mode used is selected at device reset based on the MACSEL[1:0] configuration pins (for more detailed information, see Section 3, *Device Configuration*). Table 7-70 shows which multiplexed pins are used in the MII, GMII, and RMII modes on the EMAC. For a detailed description of these pin functions, see Table 2-3, *Terminal Functions*.

 Copyright © 2006–2012, Texas Instruments Incorporated

Table 7-70. EMAC/MDIO Multiplexed Pins (MII, RMII, and GMII Modes)

BALL NUMBER	DEVICE PIN NAME	MII (MAC_SEL = 00b)	RMII (MAC_SEL = 01b)	GMII (MAC_SEL = 10b)
J2	MRXD0/RMRXD0	MRXD0	RMRXD0	MRXD0
H3	MRXD1/RMRXD1	MRXD1	RMRXD1	MRXD1
J1	MRXD2	MRXD2		MRXD2
J3	MRXD3	MRXD3		MRXD3
L1	MRXD4			MRXD4
L2	MRXD5			MRXD5
H2	MRXD6			MRXD6
M2	MRXD7			MRXD7
M1	MTXD0/RMTXD0	MTXD0	RMTXD0	MTXD0
L4	MTXD1/RMTXD1	MTXD1	RMTXD1	MTXD1
M4	MTXD2	MTXD2		MTXD2
K4	MTXD3	MTXD3		MTXD3
L3	MTXD4			MTXD4
L5	MTXD5			MTXD5
M3	MTXD6			MTXD6
N5	MTXD7			MTXD7
H4	MRXER/RMRXER	MRXER	RMRXER	MRXER
H5	MRXDV	MRXDV		MRXDV
J5	MTXEN/RMTXEN	MTXEN	RMTXEN	MTXEN
J4	MCRS/RMCRSDV	MCRS	RMCRSDV	MCRS
K3	MCOL	MCOL		MCOL
K5	GMTCLK			GMTCLK
H1	MRCLK	MRCLK		MRCLK
N4	MTCLK/REFCLK	MTCLK	RMREFCLK	MTCLK
N3	GMDIO	MDIO	MDIO	MDIO
M5	GMDCLK	MDCLK	MDCLK	MDCLK

Using the RMII Mode of the EMAC

The Ethernet Media Access Controller (EMAC) contains logic that allows it to communicate using the Reduced Media Independent Interface (RMII) protocol. This logic must be taken out of reset before being used. To use the RMII mode of the EMAC follow these steps:

1. Enable the EMAC/MDIO through the Device State Control Registers.
   - Unlock the PERCFG0 register by writing 0x0F0A 0B00 to the PERLOCK register.
   - Set bit 4 in the PERCFG0 register within 16 SYSCLK3 clock cycles to enable the EMAC/MDIO.
   - Poll the PERSTAT0 register to verify state change.
2. Initialize the EMAC/MDIO as needed.
3. Release the RMII logic from reset by clearing the RMII_RST bit of the EMAC Configuration Register (see Section 3.4.5).

As described in the previous section, the RMII mode of the EMAC must be selected by setting MACSEL[1:0] = 01b at device reset.

Interface Mode Clocking

The on-chip PLL2 and PLL2 Controller generate the clocks to the EMAC module in RGMII or GMII mode. When the EMAC is enabled with these modes, the input clock to the PLL2 Controller (CLKIN2) must have a 25-MHz frequency. For more information, see Section 7.8, *PLL2 and PLL2 Controller*.

The EMAC uses SYSCLK1 of the PLL2 Controller to generate the necessary clocks for the GMII and RGMII modes. When these modes are used, the frequency of CLKIN2 must be 25 MHz. Also, divider D1 should be programmed to ÷2 mode [default] when using the GMII mode and to ÷5 mode when using the RGMII mode. Divider D1 is software programmable and, if necessary, must be programmed after device reset to ÷5 when the RGMII mode of the EMAC is used.

Copyright © 2006–2012, Texas Instruments Incorporated

7.14.2 EMAC Peripheral Register Descriptions

Table 7-71. Ethernet MAC (EMAC) Control Registers

HEX ADDRESS RANGE	ACRONYM	REGISTER NAME
02C8 0000	TXIDVER	Transmit Identification and Version Register
02C8 0004	TXCONTROL	Transmit Control Register
02C8 0008	TXTEARDOWN	Transmit Teardown Register
02C8 000F	-	Reserved
02C8 0010	RXIDVER	Receive Identification and Version Register
02C8 0014	RXCONTROL	Receive Control Register
02C8 0018	RXTEARDOWN	Receive Teardown Register
02C8 001C	-	Reserved
02C8 0020 - 02C8 007C	-	Reserved
02C8 0080	TXINTSTATRAW	Transmit Interrupt Status (Unmasked) Register
02C8 0084	TXINTSTATMASKED	Transmit Interrupt Status (Masked) Register
02C8 0088	TXINTMASKSET	Transmit Interrupt Mask Set Register
02C8 008C	TXINTMASKCLEAR	Transmit Interrupt Mask Clear Register
02C8 0090	MACINVECTOR	MAC Input Vector Register
02C8 0094 - 02C8 009C	-	Reserved
02C8 00A0	RXINTSTATRAW	Receive Interrupt Status (Unmasked) Register
02C8 00A4	RXINTSTATMASKED	Receive Interrupt Status (Masked) Register
02C8 00A8	RXINTMASKSET	Receive Interrupt Mask Set Register
02C8 00AC	RXINTMASKCLEAR	Receive Interrupt Mask Clear Register
02C8 00B0	MACINTSTATRAW	MAC Interrupt Status (Unmasked) Register
02C8 00B4	MACINTSTATMASKED	MAC Interrupt Status (Masked) Register
02C8 00B8	MACINTMASKSET	MAC Interrupt Mask Set Register
02C8 00BC	MACINTMASKCLEAR	MAC Interrupt Mask Clear Register
02C8 00C0 - 02C8 00FC	-	Reserved
02C8 0100	RXMBPENABLE	Receive Multicast/Broadcast/Promiscuous Channel Enable Register
02C8 0104	RXUNICASTSET	Receive Unicast Enable Set Register
02C8 0108	RXUNICASTCLEAR	Receive Unicast Clear Register
02C8 010C	RXMAXLEN	Receive Maximum Length Register
02C8 0110	RXBUFFEROFFSET	Receive Buffer Offset Register
02C8 0114	RXFILTERLOWTHRESH	Receive Filter Low Priority Frame Threshold Register
02C8 0118 - 02C8 011C	-	Reserved
02C8 0120	RX0FLOWTHRESH	Receive Channel 0 Flow Control Threshold Register
02C8 0124	RX1FLOWTHRESH	Receive Channel 1 Flow Control Threshold Register
02C8 0128	RX2FLOWTHRESH	Receive Channel 2 Flow Control Threshold Register
02C8 012C	RX3FLOWTHRESH	Receive Channel 3 Flow Control Threshold Register
02C8 0130	RX4FLOWTHRESH	Receive Channel 4 Flow Control Threshold Register
02C8 0134	RX5FLOWTHRESH	Receive Channel 5 Flow Control Threshold Register
02C8 0138	RX6FLOWTHRESH	Receive Channel 6 Flow Control Threshold Register
02C8 013C	RX7FLOWTHRESH	Receive Channel 7 Flow Control Threshold Register
02C8 0140	RX0FREEBUFFER	Receive Channel 0 Free Buffer Count Register
02C8 0144	RX1FREEBUFFER	Receive Channel 1 Free Buffer Count Register
02C8 0148	RX2FREEBUFFER	Receive Channel 2 Free Buffer Count Register
02C8 014C	RX3FREEBUFFER	Receive Channel 3 Free Buffer Count Register
02C8 0150	RX4FREEBUFFER	Receive Channel 4 Free Buffer Count Register
02C8 0154	RX5FREEBUFFER	Receive Channel 5 Free Buffer Count Register

Copyright © 2006–2012, Texas Instruments Incorporated

Table 7-71. Ethernet MAC (EMAC) Control Registers (continued)

HEX ADDRESS RANGE	ACRONYM	REGISTER NAME
02C8 0158	RX6FREEBUFFER	Receive Channel 6 Free Buffer Count Register
02C8 015C	RX7FREEBUFFER	Receive Channel 7 Free Buffer Count Register
02C8 0160	MACCONTROL	MAC Control Register
02C8 0164	MACSTATUS	MAC Status Register
02C8 0168	EMCONTROL	Emulation Control Register
02C8 016C	FIFOCONTROL	FIFO Control Register (Transmit and Receive)
02C8 0170	MACCONFIG	MAC Configuration Register
02C8 0174	SOFTRESET	Soft Reset Register
02C8 0178 - 02C8 01CC	-	Reserved
02C8 01D0	MACSRCADDRLO	MAC Source Address Low Bytes Register (Lower 32-bits)
02C8 01D4	MACSRCADDRHI	MAC Source Address High Bytes Register (Upper 32-bits)
02C8 01D8	MACHASH1	MAC Hash Address Register 1
02C8 01DC	MACHASH2	MAC Hash Address Register 2
02C8 01E0	BOFFTEST	Back Off Test Register
02C8 01E4	TPACETEST	Transmit Pacing Algorithm Test Register
02C8 01E8	RXPAUSE	Receive Pause Timer Register
02C8 01EC	TXPAUSE	Transmit Pause Timer Register
02C8 01F0 - 02C8 01FC	-	Reserved
02C8 0200 - 02C8 02FC	(see Table 7-72)	EMAC Statistics Registers
02C8 0300 - 02C8 03FC	-	Reserved
02C8 0400 - 02C8 04FC	-	Reserved
02C8 0500	MACADDRLO	MAC Address Low Bytes Register (used in receive address matching)
02C8 0504	MACADDRHI	MAC Address High Bytes Register (used in receive address matching)
02C8 0508	MACINDEX	MAC Index Register
02C8 050C - 02C8 05FC	-	Reserved
02C8 0600	TX0HDP	Transmit Channel 0 DMA Head Descriptor Pointer Register
02C8 0604	TX1HDP	Transmit Channel 1 DMA Head Descriptor Pointer Register
02C8 0608	TX2HDP	Transmit Channel 2 DMA Head Descriptor Pointer Register
02C8 060C	TX3HDP	Transmit Channel 3 DMA Head Descriptor Pointer Register
02C8 0610	TX4HDP	Transmit Channel 4 DMA Head Descriptor Pointer Register
02C8 0614	TX5HDP	Transmit Channel 5 DMA Head Descriptor Pointer Register
02C8 0618	TX6HDP	Transmit Channel 6 DMA Head Descriptor Pointer Register
02C8 061C	TX7HDP	Transmit Channel 7 DMA Head Descriptor Pointer Register
02C8 0620	RX0HDP	Receive Channel 0 DMA Head Descriptor Pointer Register
02C8 0624	RX1HDP	Receive Channel 1 DMA Head Descriptor Pointer Register
02C8 0628	RX2HDP	Receive Channel 2 DMA Head Descriptor Pointer Register
02C8 062C	RX3HDP	Receive Channel 3 DMA Head Descriptor Pointer Register
02C8 0630	RX4HDP	Receive Channel 4 DMA Head Descriptor Pointer Register
02C8 0634	RX5HDP	Receive Channel 5 DMA Head Descriptor Pointer Register
02C8 0638	RX6HDP	Receive Channel 6 DMA Head Descriptor Pointer Register
02C8 063C	RX7HDP	Receive Channel 7 DMA Head Descriptor Pointer Register
02C8 0640	TX0CP	Transmit Channel 0 Completion Pointer (Interrupt Acknowledge) Register
02C8 0644	TX1CP	Transmit Channel 1 Completion Pointer (Interrupt Acknowledge) Register
02C8 0648	TX2CP	Transmit Channel 2 Completion Pointer (Interrupt Acknowledge) Register

 Copyright © 2006–2012, Texas Instruments Incorporated

Table 7-71. Ethernet MAC (EMAC) Control Registers (continued)

HEX ADDRESS RANGE	ACRONYM	REGISTER NAME
02C8 064C	TX3CP	Transmit Channel 3 Completion Pointer (Interrupt Acknowledge) Register
02C8 0650	TX4CP	Transmit Channel 4 Completion Pointer (Interrupt Acknowledge) Register
02C8 0654	TX5CP	Transmit Channel 5 Completion Pointer (Interrupt Acknowledge) Register
02C8 0658	TX6CP	Transmit Channel 6 Completion Pointer (Interrupt Acknowledge) Register
02C8 065C	TX7CP	Transmit Channel 7 Completion Pointer (Interrupt Acknowledge) Register
02C8 0660	RX0CP	Receive Channel 0 Completion Pointer (Interrupt Acknowledge) Register
02C8 0664	RX1CP	Receive Channel 1 Completion Pointer (Interrupt Acknowledge) Register
02C8 0668	RX2CP	Receive Channel 2 Completion Pointer (Interrupt Acknowledge) Register
02C8 066C	RX3CP	Receive Channel 3 Completion Pointer (Interrupt Acknowledge) Register
02C8 0670	RX4CP	Receive Channel 4 Completion Pointer (Interrupt Acknowledge) Register
02C8 0674	RX5CP	Receive Channel 5 Completion Pointer (Interrupt Acknowledge) Register
02C8 0678	RX6CP	Receive Channel 6 Completion Pointer (Interrupt Acknowledge) Register
02C8 067C	RX7CP	Receive Channel 7 Completion Pointer (Interrupt Acknowledge) Register
02C8 0680 - 02C8 06FC	-	Reserved
02C8 0700 - 02C8 077C	-	Reserved was State RAM Test Access Registers Processor Read and Write Access to Head Descriptor Pointers and Interrupt Acknowledge Registers
02C8 0780 - 02C8 0FFF	-	Reserved

Table 7-72. EMAC Statistics Registers

HEX ADDRESS RANGE	ACRONYM	REGISTER NAME
02C8 0200	RXGOODFRAMES	Good Receive Frames Register
02C8 0204	RXBCASTFRAMES	Broadcast Receive Frames Register (Total number of good broadcast frames received)
02C8 0208	RXMCASTFRAMES	Multicast Receive Frames Register (Total number of good multicast frames received)
02C8 020C	RXPAUSEFRAMES	Pause Receive Frames Register
02C8 0210	RXCRCERRORS	Receive CRC Errors Register (Total number of frames received with CRC errors)
02C8 0214	RXALIGNCODEERRORS	Receive Alignment/Code Errors Register (Total number of frames received with alignment/code errors)
02C8 0218	RXOVERSIZED	Receive Oversized Frames Register (Total number of oversized frames received)
02C8 021C	RXJABBER	Receive Jabber Frames Register (Total number of jabber frames received)
02C8 0220	RXUNDERSIZED	Receive Undersized Frames Register (Total number of undersized frames received)
02C8 0224	RXFRAGMENTS	Receive Frame Fragments Register
02C8 0228	RXFILTERED	Filtered Receive Frames Register
02C8 022C	RXQOSFILTERED	Received QOS Filtered Frames Register

Copyright © 2006–2012, Texas Instruments Incorporated

Table 7-72. EMAC Statistics Registers (continued)

HEX ADDRESS RANGE	ACRONYM	REGISTER NAME
02C8 0230	RXOCTETS	Receive Octet Frames Register (Total number of received bytes in good frames)
02C8 0234	TXGOODFRAMES	Good Transmit Frames Register (Total number of good frames transmitted)
02C8 0238	TXBCASTFRAMES	Broadcast Transmit Frames Register
02C8 023C	TXMCASTFRAMES	Multicast Transmit Frames Register
02C8 0240	TXPAUSEFRAMES	Pause Transmit Frames Register
02C8 0244	TXDEFERRED	Deferred Transmit Frames Register
02C8 0248	TXCOLLISION	Transmit Collision Frames Register
02C8 024C	TXSINGLECOLL	Transmit Single Collision Frames Register
02C8 0250	TXMULTICOLL	Transmit Multiple Collision Frames Register
02C8 0254	TXEXCESSIVECOLL	Transmit Excessive Collision Frames Register
02C8 0258	TXLATECOLL	Transmit Late Collision Frames Register
02C8 025C	TXUNDERRUN	Transmit Underrun Error Register
02C8 0260	TXCARRIERSENSE	Transmit Carrier Sense Errors Register
02C8 0264	TXOCTETS	Transmit Octet Frames Register
02C8 0268	FRAME64	Transmit and Receive 64 Octet Frames Register
02C8 026C	FRAME65T127	Transmit and Receive 65 to 127 Octet Frames Register
02C8 0270	FRAME128T255	Transmit and Receive 128 to 255 Octet Frames Register
02C8 0274	FRAME256T511	Transmit and Receive 256 to 511 Octet Frames Register
02C8 0278	FRAME512T1023	Transmit and Receive 512 to 1023 Octet Frames Register
02C8 027C	FRAME1024TUP	Transmit and Receive 1024 to 1518 Octet Frames Register
02C8 0280	NETOCTETS	Network Octet Frames Register
02C8 0284	RXSOFOVERRUNS	Receive FIFO or DMA Start of Frame Overruns Register
02C8 0288	RXMOFOVERRUNS	Receive FIFO or DMA Middle of Frame Overruns Register
02C8 028C	RXDMAOVERRUNS	Receive DMA Start of Frame and Middle of Frame Overruns Register
02C8 0290 - 02C8 02FC	-	Reserved

Table 7-73. EMAC Control Module Registers

HEX ADDRESS RANGE	ACRONYM	REGISTER NAME
02C8 1000	-	Reserved
02C8 1004	EWCTL	EMAC Control Module Interrupt Control Register
02C8 1008	EWINTTCNT	EMAC Control Module Interrupt Timer Count Register
02C8 100C - 02C8 17FF	-	Reserved

Table 7-74. EMAC Descriptor Memory

HEX ADDRESS RANGE	ACRONYM	DESCRIPTION
02C8 2000 - 02C8 3FFF	-	EMAC Descriptor Memory

Copyright © 2006–2012, Texas Instruments Incorporated

7.14.3 EMAC Electrical Data/Timing

7.14.3.1 EMAC MII and GMII Electrical Data/Timing

Table 7-75. Timing Requirements for MRCLK - MII and GMII Operation

(see Figure 7-59)

NO.			-720 -850 A-1000/-1000						UNIT
			1000 Mbps (GMII Only)		100 Mbps		10 Mbps		
			MIN	MAX	MIN	MAX	MIN	MAX	
1	$t_{c(MRCLK)}$	Cycle time, MRCLK	8		40		400		ns
2	$t_{w(MRCLKH)}$	Pulse duration, MRCLK high	2.8		14		140		ns
3	$t_{w(MRCLKL)}$	Pulse duration, MRCLK low	2.8		14		140		ns
4	$t_{t(MRCLK)}$	Transition time, MRCLK		1		3		3	ns

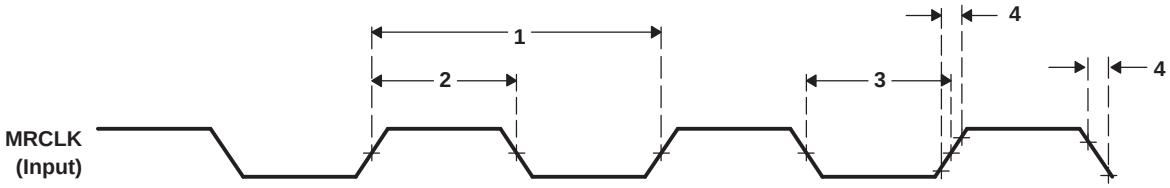

Figure 7-59. MRCLK Timing (EMAC - Receive) [MII and GMII Operation]

Table 7-76. Timing Requirements for MTCLK - MII and GMII Operation

(see Figure 7-60)

NO.			-720 -850 A-1000/-1000				UNIT
			100 Mbps		10 Mbps		
			MIN	MAX	MIN	MAX	
1	$t_{c(MTCLK)}$	Cycle time, MTCLK	40		400		ns
2	$t_{w(MTCLKH)}$	Pulse duration, MTCLK high	14		140		ns
3	$t_{w(MTCLKL)}$	Pulse duration, MTCLK low	14		140		ns
4	$t_{t(MTCLK)}$	Transition time, MTCLK		3		3	ns

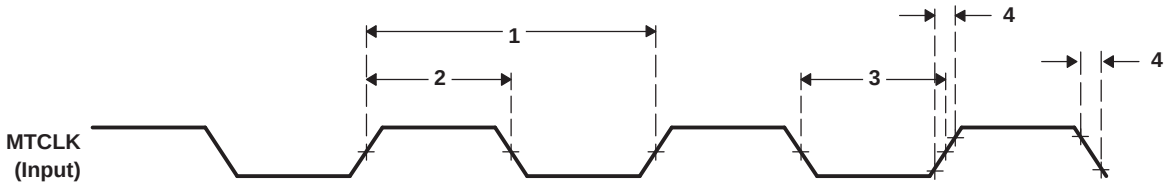

Figure 7-60. MTCLK Timing (EMAC - Transmit) [MII and GMII Operation]

Table 7-77. Switching Characteristics Over Recommended Operating Conditions for GMTCLK - GMII Operation

(see Figure 7-61)

NO.			-720 -850 A-1000/-1000 1000 Mbps MIN	MAX	UNIT
1	$t_{c(GMTCLK)}$	Cycle time, GMTCLK	8		ns
2	$t_{w(GMTCLKH)}$	Pulse duration, GMTCLK high	2.8		ns
3	$t_{w(GMTCLKL)}$	Pulse duration, GMTCLK low	2.8		ns
4	$t_{t(GMTCLK)}$	Transition time, GMTCLK		1	ns

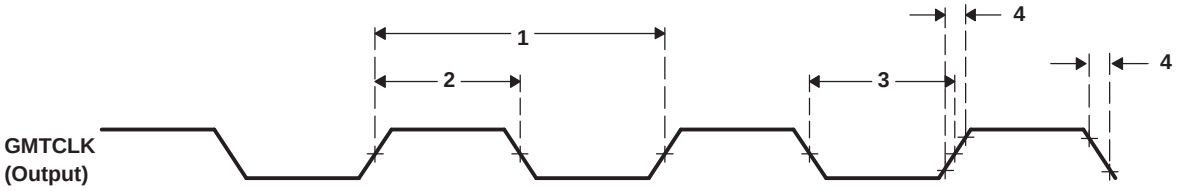

Figure 7-61. GMTCLK Timing (EMAC - Transmit) [GMII Operation]

Table 7-78. Timing Requirements for EMAC MII and GMII Receive 10/100/1000 Mbit/s (1)

(see Figure 7-62)

NO.			-720 -850 A-1000/-1000 1000 Mbps MIN	MAX	100/10 Mbps MIN	MAX	UNIT
1	$t_{su(MRXD-MRCLKH)}$	Setup time, receive selected signals valid before MRCLK high	2		8		ns
2	$t_{h(MRCLKH-MRXD)}$	Hold time, receive selected signals valid after MRCLK high	0		8		ns

(1) For **MII**, Receive selected signals include: MRXD[3:0], MRXDV, and MRXER. For **GMII**, Receive selected signals include: MRXD[7:0], MRXDV, and MRXER.

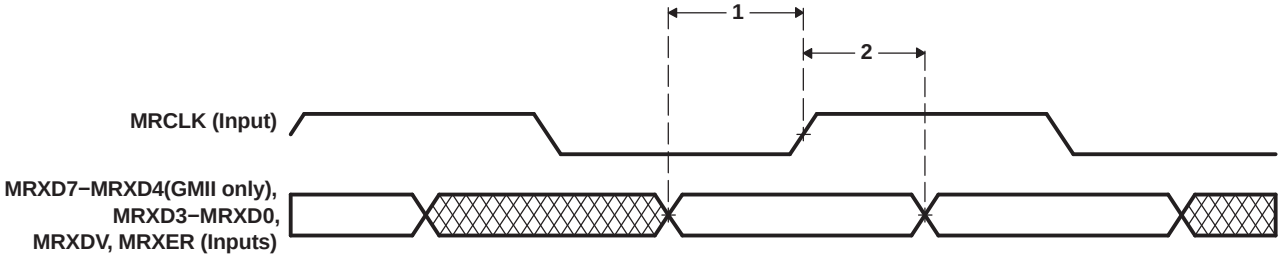

Figure 7-62. EMAC Receive Interface Timing [MII and GMII Operation]

Copyright © 2006–2012, Texas Instruments Incorporated

Table 7-79. Switching Characteristics Over Recommended Operating Conditions for EMAC MII and GMII Transmit 10/100 Mbit/s[1]

(see Figure 7-63)

NO.	PARAMETER		-720 -850 A-1000/-1000 100/10 Mbps MIN	MAX	UNIT
1	$t_{d(MTCLKH-MTXD)}$	Delay time, MTCLK high to transmit selected signals valid	5	25	ns

(1) For **MII**, Transmit selected signals include: MTXD[3:0] and MTXEN. For **GMII**, Transmit selected signals include: GMTXD[7:0] and MTXEN.

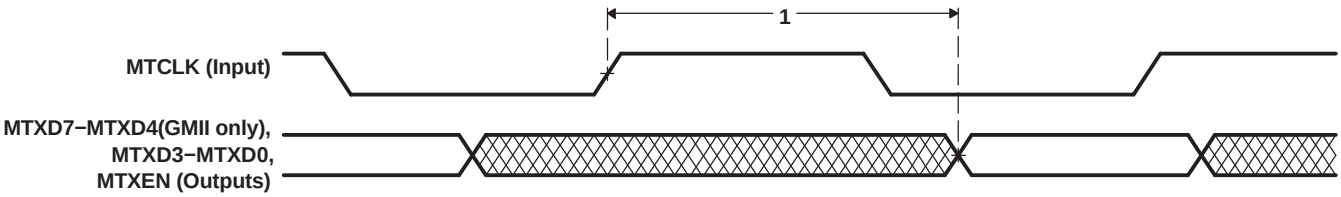

Figure 7-63. EMAC Transmit Interface Timing [MII and GMII Operation]

Table 7-80. Switching Characteristics Over Recommended Operating Conditions for EMAC GMII Transmit 1000 Mbit/s[1]

(see Figure 7-64)

NO.	PARAMETER		-720 -850 A-1000/-1000 1000 Mbps MIN	MAX	UNIT
1	$t_{d(GMTCLKH-MTXD)}$	Delay time, GMTCLK high to transmit selected signals valid	0.5	5	ns

(1) For **GMII**, Transmit selected signals include: GMTXD[7:0] and MTXEN.

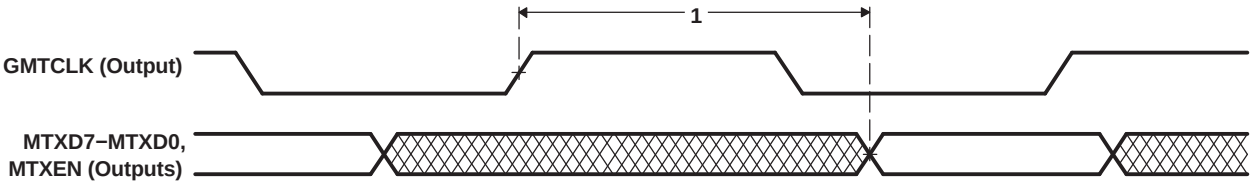

Figure 7-64. EMAC Transmit Interface Timing [GMII Operation]

7.14.3.2 EMAC RMII Electrical Data/Timing

The RMREFCLK pin is used to source a clock to the EMAC when it is configured for RMII operation. The RMREFCLK frequency should be 50 MHz ±50 PPM with a duty cycle between 35% and 65%, inclusive.

Table 7-81. Timing Requirements for RMREFCLK - RMII Operation

(see Figure 7-65)

NO.	PARAMETER		-720 -850 A-1000/-1000		UNIT
			MIN	MAX	
1	$t_{w(RMREFCLKH)}$	Pulse duration, RMREFCLK high	7	13	ns
2	$t_{w(RMREFCLKL)}$	Pulse duration, RMREFCLK low	7	13	ns
3	$t_{t(RMREFCLK)}$	Transition time, RMREFCLK		2	ns

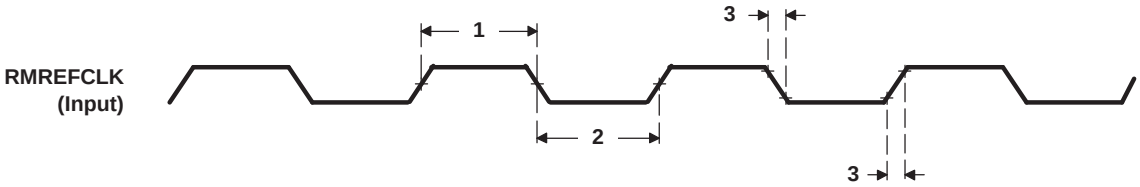

Figure 7-65. RMREFCLK Timing

Table 7-82. Switching Characteristics Over Recommended Operating Conditions for EMAC RMII Transmit 10/100 Mbit/s (1)

(see Figure 7-66)

NO.	PARAMETER		-720 -850 A-1000/-1000		UNIT
			1000 Mbps		
			MIN	MAX	
1	$t_{d(RMREFCLKH-RMTXD)}$	Delay time, RMREFCLK high to transmit selected signals valid	3	10	ns

(1) For RMII, transmit selected signals include: RMTXD[1:0] and RMTXEN.

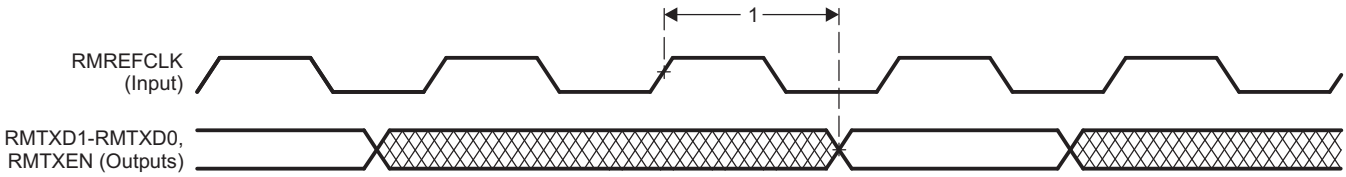

Figure 7-66. EMAC Transmit Interface Timing [RMII Operation]

Copyright © 2006–2012, Texas Instruments Incorporated

Table 7-83. Timing Requirements for EMAC RMII Input Receive for 100 Mbps[(1)]

(see Figure 7-67)

NO.			-720 -850 A-1000/-1000		UNIT
			MIN	MAX	
1	$t_{su(RMRXD-RMREFCLK)}$	Setup time, receive selected signals valid before RMREFCLK (at DSP) high/low	4.0		ns
2	$t_{h(RMREFCLK-RMRXD)}$	Hold time, receive selected signals valid after RMREFCLK (at DSP) high/low	2.0		ns

(1) For RMII, receive selected signals include: RMRXD[1:0], RMRXER, and RMCRSDV.

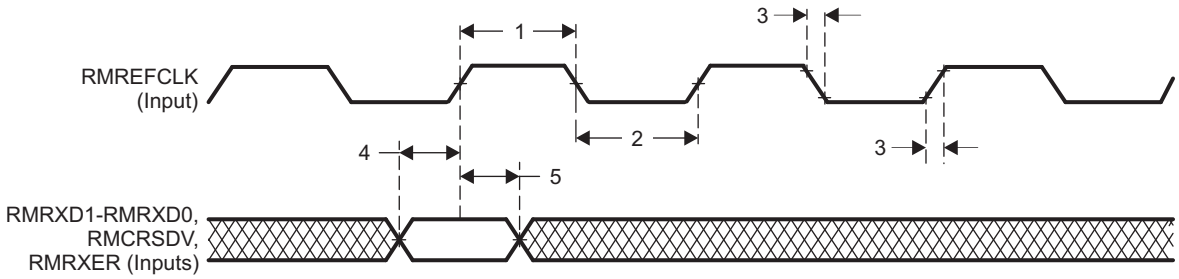

Figure 7-67. EMAC Receive Interface Timing [RMII Operation]

7.14.3.3 EMAC RGMII Electrical Data/Timing

An extra clock signal, RGREFCLK, running at 125 MHz is included as a convenience to the user. Note that this reference clock is ***not*** a free-running clock. This should only be used by an external device if it does not expect a valid clock during device reset.

Table 7-84. Switching Characteristics Over Recommended Operating Conditions for EMAC RGREFCLK - RGMII Operation

(see Figure 7-68)

NO.	PARAMETER		-720 -850 A-1000/-1000		UNIT
			MIN	MAX	
1	$t_{c(RGFCLK)}$	Cycle time, RGREFCLK	8 - 0.8	8 + 0.8	ns
2	$t_{w(RGFCLKH)}$	Pulse duration, RGREFCLK high	3.2	4.8	ns
3	$t_{w(RGFCLKL)}$	Pulse duration, RGREFCLK low	3.2	4.8	ns
4	$t_{t(RGFCLK)}$	Transition time, RGREFCLK		0.75	ns

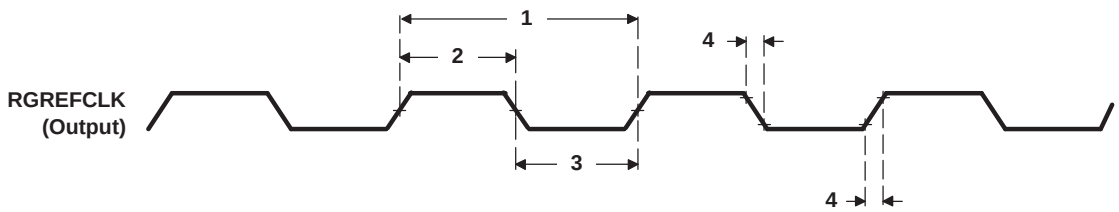

Figure 7-68. RGREFCLK Timing

Table 7-85. Timing Requirements for RGRXC - RGMII Operation

(see Figure 7-69)

NO.				-720 -850 A-1000/-1000		UNIT
				MIN	MAX	
1	$t_{c(RGRXC)}$	Cycle time, RGRXC	10 Mbps	360	440	ns
			100 Mbps	36	44	
			1000 Mbps	7.2	8.8	
2	$t_{w(RGRXCH)}$	Pulse duration, RGRXC high	10 Mbps	$0.40*t_{c(RGRXC)}$	$0.60*t_{c(RGRXC)}$	ns
			100 Mbps	$0.40*t_{c(RGRXC)}$	$0.60*t_{c(RGRXC)}$	
			1000 Mbps	$0.45*t_{c(RGRXC)}$	$0.55*t_{c(RGRXC)}$	
3	$t_{w(RGRXCL)}$	Pulse duration, RGRXC low	10 Mbps	$0.40*t_{c(RGRXC)}$	$0.60*t_{c(RGRXC)}$	ns
			100 Mbps	$0.40*t_{c(RGRXC)}$	$0.60*t_{c(RGRXC)}$	
			1000 Mbps	$0.45*t_{c(RGRXC)}$	$0.55*t_{c(RGRXC)}$	
4	$t_{t(RGRXC)}$	Transition time, RGRXC	10 Mbps		0.75	ns
			100 Mbps		0.75	
			1000 Mbps		0.75	

Copyright © 2006–2012, Texas Instruments Incorporated

Table 7-86. Timing Requirements for EMAC RGMII Input Receive for 10/100/1000 Mbps(1)

(see Figure 7-69)

NO.			-720 -850 A-1000/-1000 MIN	MAX	UNIT
5	$t_{su(RGRXD-RGRXCH)}$	Setup time, receive selected signals valid before RGRXC (at DSP) high/low	1.0		ns
6	$t_{h(RGRXCH-RGRXD)}$	Hold time, receive selected signals valid after RGRXC (at DSP) high/low	1.0		ns

(1) For RGMII, receive selected signals include: RGRXD[3:0] and RGRXCTL.

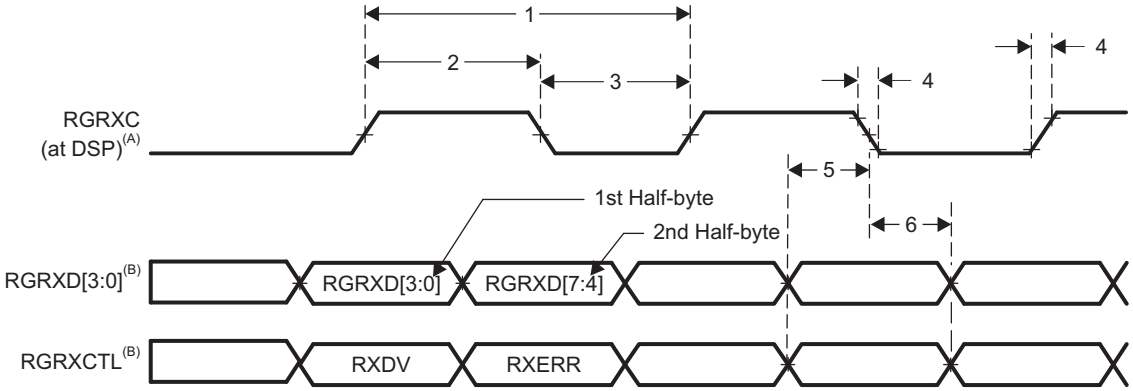

A. RGRXC must be externally delayed relative to the data and control pins.

B. Data and control information is received using both edges of the clocks. RGRXD[3:0] carries data bits 3-0 on the rising edge of RGRXC and data bits 7-4 on the falling edge of RGRXC. Similarly, RGRXCTL carries RXDV on rising edge of RGRXC and RXERR on falling edge.

Figure 7-69. EMAC Receive Interface Timing [RGMII Operation]

Table 7-87. Switching Characteristics Over Recommended Operating Conditions for RGTXC - RGMII Operation for 10/100/1000 Mbit/s

(see Figure 7-70)

NO.				-720 -850 A-1000/-1000 MIN	MAX	UNIT
1	$t_{c(RGTXC)}$	Cycle time, RGTXC	10 Mbps	360	440	ns
			100 Mbps	36	44	
			1000 Mbps	7.2	8.8	
2	$t_{w(RGTXCH)}$	Pulse duration, RGTXC high	10 Mbps	$0.40*t_{c(RGTXC)}$	$0.60*t_{c(RGTXC)}$	ns
			100 Mbps	$0.40*t_{c(RGTXC)}$	$0.60*t_{c(RGTXC)}$	
			1000 Mbps	$0.45*t_{c(RGTXC)}$	$0.55*t_{c(RGTXC)}$	
3	$t_{w(RGTXCL)}$	Pulse duration, RGTXC low	10 Mbps	$0.40*t_{c(RGTXC)}$	$0.60*t_{c(RGTXC)}$	ns
			100 Mbps	$0.40*t_{c(RGTXC)}$	$0.60*t_{c(RGTXC)}$	
			1000 Mbps	$0.45*t_{c(RGTXC)}$	$0.55*t_{c(RGTXC)}$	
4	$t_{t(RGTXC)}$	Transition time, RGTXC	10 Mbps		0.75	ns
			100 Mbps		0.75	
			1000 Mbps		0.75	

Table 7-88. Switching Characteristics Over Recommended Operating Conditions for EMAC RGMII Transmit[1]

(see Figure 7-70)

NO.	PARAMETER		-720 -850 A-1000/-1000		UNIT
			MIN	MAX	
5	$t_{su(RGTXD-RGTXCH)}$	Setup time, transmit selected signals valid before RGTXC (at DSP) high/low	1.2		ns
6	$t_{h(RGTXCH-RGTXD)}$	Hold time, transmit selected signals valid after RGTXC (at DSP) high/low	1.2		

(1) For RGMII, transmit selected signals include: RGTXD[3:0] and RGTXCTL.

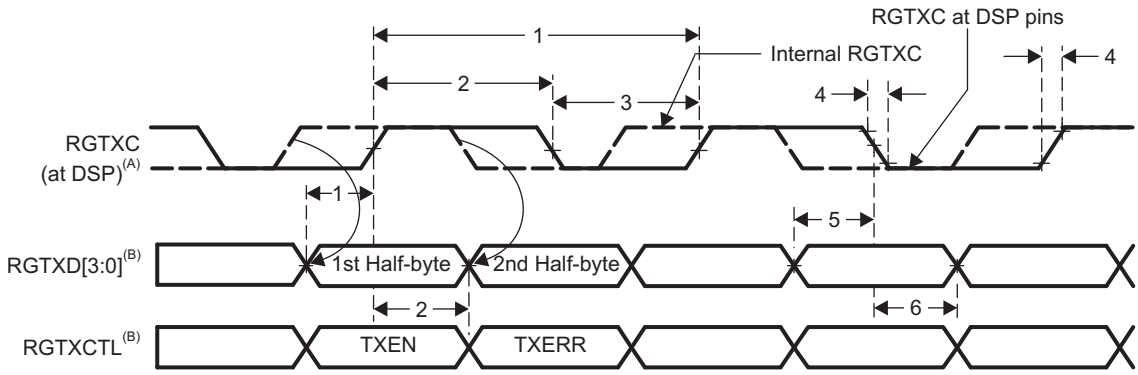

A. RGTXC is delayed internally before being driven to the RGTXC pin.

B. Data and control information is transmitted using both edges of the clocks. RGTXD[3:0] carries data bits 3-0 on the rising edge of RGTXC and data bits 7-4 on the falling edge of RGTXC. Similarly, RGTXCTL carries TXEN on rising edge of RGTXC and TXERR of falling edge.

Figure 7-70. EMAC Transmit Interface Timing [RGMII Operation]

Copyright © 2006–2012, Texas Instruments Incorporated

7.14.4 Management Data Input/Output (MDIO)

The Management Data Input/Output (MDIO) module implements the 802.3 serial management interface to interrogate and controls up to 32 Ethernet PHY(s) connected to the device, using a shared two-wire bus. Application software uses the MDIO module to configure the auto-negotiation parameters of each PHY attached to the EMAC, retrieve the negotiation results, and configure required parameters in the EMAC module for correct operation. The module is designed to allow almost transparent operation of the MDIO interface, with very little maintenance from the core processor.

The EMAC control module is the main interface between the device core processor, the MDIO module, and the EMAC module. The relationship between these three components is shown in Figure 7-58.

The MDIO uses the same pins for the MII, GMII, and RMII modes. Standalone pins are included for the RGMII mode due to specific voltage requirements. Only one mode can be used at a time. The mode used is selected at device reset based on the MACSEL[1:0] configuration pins (for more detailed information, see Section 3, *Device Configuration*). Table 7-70 above shows which multiplexed pin are used in the MII, GMII, and RMII modes on the MDIO.

For more detailed information on the EMAC/MDIO, see the *TMS320C645x DSP EMAC/MDIO Module Reference Guide* (literature number SPRU975).

7.14.4.1 MDIO Device-Specific Information

Clocking Information

The MDIO clock is based on a divide-down of the SYSCLK3 (from the PLL1 controller) and is specified to run up to 2.5 MHz, although typical operation is 1.0 MHz. Since the peripheral clock frequency is variable, the application software or driver controls the divide-down amount.

7.14.4.2 MDIO Peripheral Register Descriptions

Table 7-89. MDIO Registers

HEX ADDRESS RANGE	ACRONYM	REGISTER NAME
02C8 1800	VERSION	MDIO Version Register
02C8 1804	CONTROL	MDIO Control Register
02C8 1808	ALIVE	MDIO PHY Alive Status Register
02C8 180C	LINK	MDIO PHY Link Status Register
02C8 1810	LINKINTRAW	MDIO Link Status Change Interrupt (Unmasked) Register
02C8 1814	LINKINTMASKED	MDIO Link Status Change Interrupt (Masked) Register
02C8 1818 - 02C8 181C	-	Reserved
02C8 1820	USERINTRAW	MDIO User Command Complete Interrupt (Unmasked) Register
02C8 1824	USERINTMASKED	MDIO User Command Complete Interrupt (Masked) Register
02C8 1828	USERINTMASKSET	MDIO User Command Complete Interrupt Mask Set Register
02C8 182C	USERINTMASKCLEAR	MDIO User Command Complete Interrupt Mask Clear Register
02C8 1830 - 02C8 187C	-	Reserved
02C8 1880	USERACCESS0	MDIO User Access Register 0
02C8 1884	USERPHYSEL0	MDIO User PHY Select Register 0
02C8 1888	USERACCESS1	MDIO User Access Register 1
02C8 188C	USERPHYSEL1	MDIO User PHY Select Register 1
02C8 1890 - 02C8 1FFF	-	Reserved

Copyright © 2006–2012, Texas Instruments Incorporated

7.14.4.3 MDIO Electrical Data/Timing

Table 7-90. Timing Requirements for MDIO Input (R)(G)MII

(see Figure 7-71)

NO.			-720 -850 A-1000/-1000		UNIT
			MIN	MAX	
1	$t_{c(MDCLK)}$	Cycle time, MDCLK	400		ns
2a	$t_{w(MDCLK)}$	Pulse duration, MDCLK high	180		ns
2b	$t_{w(MDCLK)}$	Pulse duration, MDCLK low	180		ns
3	$t_{t(MDCLK)}$	Transition time, MDCLK		5	ns
4	$t_{su(MDIO-MDCLKH)}$	Setup time, MDIO data input valid before MDCLK high	10		ns
5	$t_{h(MDCLKH-MDIO)}$	Hold time, MDIO data input valid after MDCLK high	10		ns

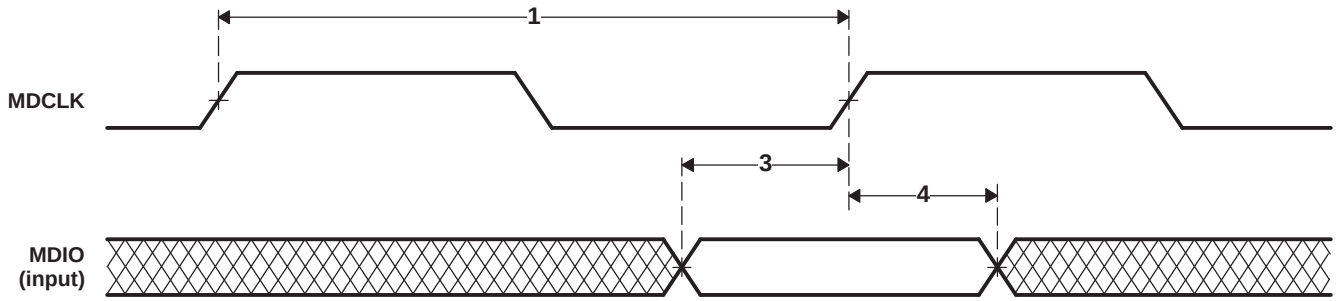

Figure 7-71. MDIO Input Timing

Table 7-91. Switching Characteristics Over Recommended Operating Conditions for MDIO Output

(see Figure 7-72)

NO.	PARAMETER		-720 -850 A-1000/-1000		UNIT
			MIN	MAX	
7	$t_{d(MDCLKL-MDIO)}$	Delay time, MDCLK low to MDIO data output valid		100	ns

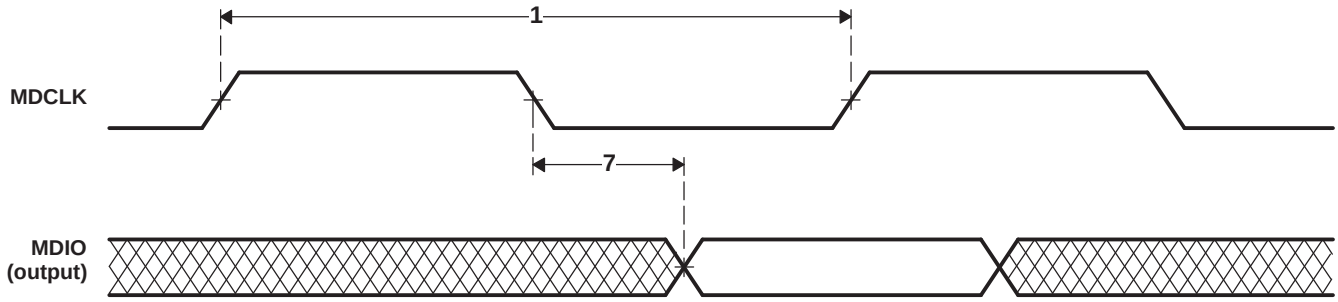

Figure 7-72. MDIO Output Timing

Copyright © 2006–2012, Texas Instruments Incorporated

7.15 Timers

The timers can be used to: time events, count events, generate pulses, interrupt the CPU, and send synchronization events to the EDMA3 channel controller.

7.15.1 Timers Device-Specific Information

The C6454 device has two general-purpose timers, Timer0 and Timer1, each of which can be configured as a general-purpose timer or a watchdog timer. When configured as a general-purpose timer, each timer can be programmed as a 64-bit timer or as two separate 32-bit timers.

Each timer is made up of two 32-bit counters: a high counter and a low counter. The timer pins, TINPLx and TOUTLx are connected to the low counter. The high counter does not have any external device pins.

7.15.2 Timers Peripheral Register Descriptions

Table 7-92. Timer 0 Registers

HEX ADDRESS RANGE	ACRONYM	REGISTER NAME	COMMENTS
0294 0000	-	Reserved	
0294 0004	EMUMGT_CLKSPD0	Timer 0 Emulation Management/Clock Speed Register	
0294 0008	-	Reserved	
0294 000C	-	Reserved	
0294 0010	CNTLO0	Timer 0 Counter Register Low	
0294 0014	CNTHI0	Timer 0 Counter Register High	
0294 0018	PRDLO0	Timer 0 Period Register Low	
0294 001C	PRDHI0	Timer 0 Period Register High	
0294 0020	TCR0	Timer 0 Control Register	
0294 0024	TGCR0	Timer 0 Global Control Register	
0294 0028	WDTCR0	Timer 0 Watchdog Timer Control Register	
0294 002C	-	Reserved	
0294 0030	-	Reserved	
0294 0034 - 0297 FFFF	-	Reserved	

Table 7-93. Timer 1 Registers

HEX ADDRESS RANGE	ACRONYM	REGISTER NAME	COMMENTS
0298 0000	-	Reserved	
0298 0004	EMUMGT_CLKSPD1	Timer 1 Emulation Management/Clock Speed Register	
0298 0008	-	Reserved	
0298 000C	-	Reserved	
0298 0010	CNTLO1	Timer 1 Counter Register Low	
0298 0014	CNTHI1	Timer 1 Counter Register High	
0298 0018	PRDLO1	Timer 1 Period Register Low	
0298 001C	PRDHI1	Timer 1 Period Register High	
0298 0020	TCR1	Timer 1 Control Register	
0298 0024	TGCR1	Timer 1 Global Control Register	
0298 0028	WDTCR1	Timer 1 Watchdog Timer Control Register	
0298 002C	-	Reserved	
0298 0030	-	Reserved	
0298 0034 - 0299 FFFF	-	Reserved	

Copyright © 2006–2012, Texas Instruments Incorporated

7.15.3 Timers Electrical Data/Timing

Table 7-94. Timing Requirements for Timer Inputs(1)

(see Figure 7-73)

NO.			-720 -850 A-1000/-1000		UNIT
			MIN	MAX	
1	$t_{w(TINPH)}$	Pulse duration, TINPLx high	12P		ns
2	$t_{w(TINPL)}$	Pulse duration, TINPLx low	12P		ns

(1) P = 1/CPU clock frequency in ns. For example, when running parts at 1000 MHz, use P = 1 ns.

Table 7-95. Switching Characteristics Over Recommended Operating Conditions for Timer Outputs(1)

(see Figure 7-73)

NO.	PARAMETER		-720 -850 A-1000/-1000		UNIT
			MIN	MAX	
3	$t_{w(TOUTH)}$	Pulse duration, TOUTLx high	12P - 3		ns
4	$t_{w(TOUTL)}$	Pulse duration, TOUTLx low	12P - 3		ns

(1) P = 1/CPU clock frequency in ns. For example, when running parts at 1000 MHz, use P = 1 ns.

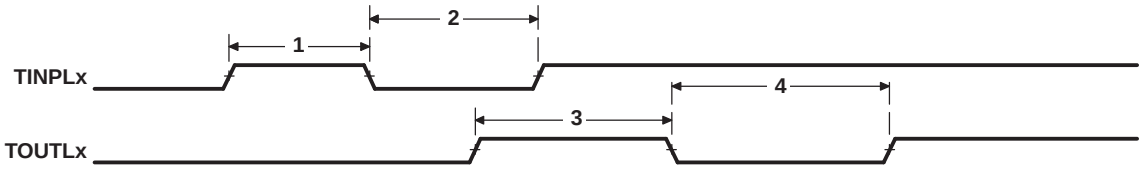

Figure 7-73. Timer Timing

Copyright © 2006–2012, Texas Instruments Incorporated

7.16 Peripheral Component Interconnect (PCI)

The C6454 DSP supports connections to a PCI backplane via the integrated PCI master/slave bus interface. The PCI port interfaces to DSP internal resources via the data switched central resource. The data switched central resource is described in more detail in Section 4.

For more detailed information on the PCI port peripheral module, see the *TMS320C645x DSP Peripheral Component Interconnect (PCI) User's Guide* (literature number SPRUE60).

7.16.1 PCI Device-Specific Information

The PCI peripheral on the C6454 DSP conforms to the *PCI Local Bus Specification* (version 2.3). The PCI peripheral can act both as a PCI bus master and as a target. It supports PCI bus operation of speeds up to 66 MHz and uses a 32-bit data/address bus.

On the C6454 device, the pins of the PCI peripheral are multiplexed with the pins of the HPI and GPIO peripherals. PCI functionality for these pins is controlled (enabled/disabled) by the PCI_EN pin (Y29). The maximum speed of the PCI, 33 MHz or 66 MHz, is controlled through the PCI66 pin (U27). For more detailed information on the peripheral control, see Section 3, *Device Configuration*.

The C6454 device provides an initialization mechanism through which the default values for some of the PCI configuration registers can be read from an I2C EEPROM. Table 7-96 shows the registers which can be initialized through the PCI auto-initialization. Also shown is the default value of these registers when PCI auto-initialization is not used. PCI auto-initialization is controlled (enabled/disabled) through the PCI_EEAI pin (P25). For more information on this feature, see the *TMS320C645x DSP Peripheral Component Interconnect (PCI) User's Guide* (literature number SPRUE60) and the *TMS320C645x Bootloader User's Guide* (literature number SPRUEC6).

Table 7-96. Default Values for PCI Configuration Registers

REGISTER	DEFAULT VALUE
Vendor ID/Device ID Register (PCIVENDEV)	104C B000h
Class Code/Revision ID Register (PCICLREV)	0000 0001h
Subsystem Vendor ID/Subsystem ID Register (PCISUBID)	0000 0000h
Max Latency/Min Grant/Interrupt Pin/Interrupt Line Register (PCILGINT)	0000 0100h

The on-chip Bootloader supports a host boot which allows an external PCI device to load application code into the DSP's memory space. The PCI boot is terminated when the Host generates a DSP interrupt. The Host can generate a DSP interrupt through the PCI peripheral by setting the DSPINT bit in the Back-End Application Interrupt Enable Set Register (PCIBINTSET) and the Status Set Register (PCISTATSET). For more information on the boot sequence of the C6454 DSP, see Section 2.4.

NOTE

After the host boot is complete, the DSP interrupt is registered in bit 0 (channel 0) of the EDMA Event Register (ER). This event must be cleared by software before triggering transfers on DMA channel 0.

7.16.2 PCI Peripheral Register Descriptions

Table 7-97. PCI Configuration Registers

PCI HOST ACCESS HEX ADDRESS OFFSET	ACRONYM	PCI HOST ACCESS REGISTER NAME
0x00	PCIVENDEV	Vendor ID/Device ID
0x04	PCICSR	Command/Status
0x08	PCICLREV	Class Code/Revision ID
0x0C	PCICLINE	BIST/Header Type/Latency Timer/Cacheline Size
0x10	PCIBAR0	Base Address 0
0x14	PCIBAR1	Base Address 1
0x18	PCIBAR2	Base Address 2
0x1C	PCIBAR3	Base Address 3
0x20	PCIBAR4	Base Address 4
0x24	PCIBAR5	Base Address 5
0x28 - 0x2B	-	Reserved
0x2C	PCISUBID	Subsystem Vendor ID/Subsystem ID
0x30	-	Reserved
0x34	PCICPBPTR	Capabilities Pointer
0x38 - 0x3B	-	Reserved
0x3C	PCILGINT	Max Latency/Min Grant/Interrupt Pin/Interrupt Line
0x40 - 0x7F	-	Reserved

Table 7-98. PCI Back-End Configuration Registers

DSP ACCESS HEX ADDRESS RANGE	ACRONYM	DSP ACCESS REGISTER NAME
02C0 0000 - 02C0 000F	-	Reserved
02C0 0010	PCISTATSET	PCI Status Set Register
02C0 0014	PCISTATCLR	PCI Status Clear Register
02C0 0018 - 02C0 001F	-	Reserved
02C0 0020	PCIHINTSET	PCI Host Interrupt Enable Set Register
02C0 0024	PCIHINTCLR	PCI Host Interrupt Enable Clear Register
02C0 0028 - 02C0 002F	-	Reserved
02C0 0030	PCIBINTSET	PCI Back End Application Interrupt Enable Set Register
02C0 0034	PCIBINTCLR	PCI Back End Application Interrupt Enable Clear Register
02C0 0038	PCIBCLKMGT	PCI Back End Application Clock Management Register
02C0 003C - 02C0 00FF	-	Reserved
02C0 0100	PCIVENDEVMIR	PCI Vendor ID/Device ID Mirror Register
02C0 0104	PCICSRMIR	PCI Command/Status Mirror Register
02C0 0108	PCICLREVMIR	PCI Class Code/Revision ID Mirror Register
02C0 010C	PCICLINEMIR	PCI BIST/Header Type/Latency Timer/Cacheline Size Mirror Register
02C0 0110	PCIBAR0MSK	PCI Base Address Mask Register 0
02C0 0114	PCIBAR1MSK	PCI Base Address Mask Register 1
02C0 0118	PCIBAR2MSK	PCI Base Address Mask Register 2
02C0 011C	PCIBAR3MSK	PCI Base Address Mask Register 3
02C0 0120	PCIBAR4MSK	PCI Base Address Mask Register 4
02C0 0124	PCIBAR5MSK	PCI Base Address Mask Register 5
02C0 0128 - 02C0 012B	-	Reserved
02C0 012C	PCISUBIDMIR	PCI Subsystem Vendor ID/Subsystem ID Mirror Register
02C0 0130	-	Reserved

 Copyright © 2006–2012, Texas Instruments Incorporated

Table 7-98. PCI Back-End Configuration Registers (continued)

DSP ACCESS HEX ADDRESS RANGE	ACRONYM	DSP ACCESS REGISTER NAME
02C0 0134	PCICPBPTRMIR	PCI Capabilities Pointer Mirror Register
02C0 0138 - 02C0 013B	-	Reserved
02C0 013C	PCILGINTMIR	PCI Max Latency/Min Grant/Interrupt Pin/Interrupt Line Mirror Register
02C0 0140 - 02C0 017F	-	Reserved
02C0 0180	PCISLVCNTL	PCI Slave Control Register
02C0 0184 - 02C0 01BF	-	Reserved
02C0 01C0	PCIBAR0TRL	PCI Slave Base Address 0 Translation Register
02C0 01C4	PCIBAR1TRL	PCI Slave Base Address 1 Translation Register
02C0 01C8	PCIBAR2TRL	PCI Slave Base Address 2 Translation Register
02C0 01CC	PCIBAR3TRL	PCI Slave Base Address 3 Translation Register
02C0 01D0	PCIBAR4TRL	PCI Slave Base Address 4 Translation Register
02C0 01D4	PCIBAR5TRL	PCI Slave Base Address 5 Translation Register
02C0 01D8 - 02C0 01DF	-	Reserved
02C0 01E0	PCIBAR0MIR	PCI Base Address Register 0 Mirror Register
02C0 01E4	PCIBAR1MIR	PCI Base Address Register 1 Mirror Register
02C0 01E8	PCIBAR2MIR	PCI Base Address Register 2 Mirror Register
02C0 01EC	PCIBAR3MIR	PCI Base Address Register 3 Mirror Register
02C0 01F0	PCIBAR4MIR	PCI Base Address Register 4 Mirror Register
02C0 01F4	PCIBAR5MIR	PCI Base Address Register 5 Mirror Register
02C0 01F8 - 02C0 02FF	-	Reserved
02C0 0300	PCIMCFGDAT	PCI Master Configuration/IO Access Data Register
02C0 0304	PCIMCFGADR	PCI Master Configuration/IO Access Address Register
02C0 0308	PCIMCFGCMD	PCI Master Configuration/IO Access Command Register
02C0 030C - 02C0 030F	-	Reserved
02C0 0310	PCIMSTCFG	PCI Master Configuration Register

Table 7-99. DSP-to-PCI Address Translation Registers

DSP ACCESS HEX ADDRESS RANGE	ACRONYM	DSP ACCESS REGISTER NAME
02C0 0314	PCIADDSUB0	PCI Address Substitute 0 Register
02C0 0318	PCIADDSUB1	PCI Address Substitute 1 Register
02C0 031C	PCIADDSUB2	PCI Address Substitute 2 Register
02C0 0320	PCIADDSUB3	PCI Address Substitute 3 Register
02C0 0324	PCIADDSUB4	PCI Address Substitute 4 Register
02C0 0328	PCIADDSUB5	PCI Address Substitute 5 Register
02C0 032C	PCIADDSUB6	PCI Address Substitute 6 Register
02C0 0330	PCIADDSUB7	PCI Address Substitute 7 Register
02C0 0334	PCIADDSUB8	PCI Address Substitute 8 Register
02C0 0338	PCIADDSUB9	PCI Address Substitute 9 Register
02C0 033C	PCIADDSUB10	PCI Address Substitute 10 Register
02C0 0340	PCIADDSUB11	PCI Address Substitute 11 Register
02C0 0344	PCIADDSUB12	PCI Address Substitute 12 Register
02C0 0348	PCIADDSUB13	PCI Address Substitute 13 Register
02C0 034C	PCIADDSUB14	PCI Address Substitute 14 Register
02C0 0350	PCIADDSUB15	PCI Address Substitute 15 Register
02C0 0354	PCIADDSUB16	PCI Address Substitute 16 Register
02C0 0358	PCIADDSUB17	PCI Address Substitute 17 Register

Copyright © 2006–2012, Texas Instruments Incorporated

Table 7-99. DSP-to-PCI Address Translation Registers (continued)

DSP ACCESS HEX ADDRESS RANGE	ACRONYM	DSP ACCESS REGISTER NAME
02C0 035C	PCIADDSUB18	PCI Address Substitute 18 Register
02C0 0360	PCIADDSUB19	PCI Address Substitute 19 Register
02C0 0364	PCIADDSUB20	PCI Address Substitute 20 Register
02C0 0368	PCIADDSUB21	PCI Address Substitute 21 Register
02C0 036C	PCIADDSUB22	PCI Address Substitute 22 Register
02C0 0370	PCIADDSUB23	PCI Address Substitute 23 Register
02C0 0374	PCIADDSUB24	PCI Address Substitute 24 Register
02C0 0378	PCIADDSUB25	PCI Address Substitute 25 Register
02C0 037C	PCIADDSUB26	PCI Address Substitute 26 Register
02C0 0380	PCIADDSUB27	PCI Address Substitute 27 Register
02C0 0384	PCIADDSUB28	PCI Address Substitute 28 Register
02C0 0388	PCIADDSUB29	PCI Address Substitute 29 Register
02C0 038C	PCIADDSUB30	PCI Address Substitute 30 Register
02C0 0390	PCIADDSUB31	PCI Address Substitute 31 Register

Copyright © 2006–2012, Texas Instruments Incorporated

Table 7-100. PCI Hook Configuration Registers

DSP ACCESS HEX ADDRESS RANGE	ACRONYM	DSP ACCESS REGISTER NAME
02C0 0394	PCIVENDEVPRG	PCI Vendor ID and Device ID Program Register
02C0 0398	PCICMDSTATPRG	PCI Command and Status Program Register
02C0 039C	PCICLREVPRG	PCI Class Code and Revision ID Program Register
02C0 03A0	PCISUBIDPRG	PCI Subsystem Vendor ID and Subsystem ID Program Register
02C0 03A4	PCIMAXLGPRG	PCI Max Latency and Min Grant Program Register
02C0 03A8	PCILRSTREG	PCI LRESET Register
02C0 03AC	PCICFGDONE	PCI Configuration Done Register
02C0 03B0	PCIBAR0MPRG	PCI Base Address Mask Register 0 Program Register
02C0 03B4	PCIBAR1MPRG	PCI Base Address Mask Register 1 Program Register
02C0 03B8	PCIBAR2MPRG	PCI Base Address Mask Register 2 Program Register
02C0 03BC	PCIBAR3MPRG	PCI Base Address Mask Register 3 Program Register
02C0 03C0	PCIBAR4MPRG	PCI Base Address Mask Register 4 Program Register
02C0 03C4	PCIBAR5MPRG	PCI Base Address Mask Register 5 Program Register
02C0 03C8	PCIBAR0PRG	PCI Base Address Register 0 Program Register
02C0 03CC	PCIBAR1PRG	PCI Base Address Register 1 Program Register
02C0 03D0	PCIBAR2PRG	PCI Base Address Register 2 Program Register
02C0 03D4	PCIBAR3PRG	PCI Base Address Register 3 Program Register
02C0 03D8	PCIBAR4PRG	PCI Base Address Register 4 Program Register
02C0 03DC	PCIBAR5PRG	PCI Base Address Register 5 Program Register
02C0 03E0	PCIBAR0TRLPRG	PCI Base Address Translation Register 0 Program Register
02C0 03E4	PCIBAR1TRLPRG	PCI Base Address Translation Register 1 Program Register
02C0 03E8	PCIBAR2TRLPRG	PCI Base Address Translation Register 2 Program Register
02C0 03EC	PCIBAR3TRLPRG	PCI Base Address Translation Register 3 Program Register
02C0 03F0	PCIBAR4TRLPRG	PCI Base Address Translation Register 4 Program Register
02C0 03F4	PCIBAR5TRLPRG	PCI Base Address Translation Register 5 Program Register
02C0 03F8	PCIBASENPRG	PCI Base En Prog Register
02C0 03FC - 02C0 03FF	-	Reserved

Table 7-101. PCI External Memory Space

HEX ADDRESS OFFSET	ACRONYM	REGISTER NAME
4000 0000 - 407F FFFF	-	PCI Master Window 0
4080 0000 - 40FF FFFF	-	PCI Master Window 1
4100 0000 - 417F FFFF	-	PCI Master Window 2
4180 0000 - 41FF FFFF	-	PCI Master Window 3
4200 0000 - 427F FFFF	-	PCI Master Window 4
4280 0000 - 42FF FFFF	-	PCI Master Window 5
4300 0000 - 437F FFFF	-	PCI Master Window 6
4380 0000 - 43FF FFFF	-	PCI Master Window 7
4400 0000 - 447F FFFF	-	PCI Master Window 8
4480 0000 - 44FF FFFF	-	PCI Master Window 9
4500 0000 - 457F FFFF	-	PCI Master Window 10
4580 0000 - 45FF FFFF	-	PCI Master Window 11
4600 0000 - 467F FFFF	-	PCI Master Window 12
4680 0000 - 46FF FFFF	-	PCI Master Window 13
4700 0000 - 477F FFFF	-	PCI Master Window 14
4780 0000 - 47FF FFFF	-	PCI Master Window 15

Copyright © 2006–2012, Texas Instruments Incorporated

Table 7-101. PCI External Memory Space (continued)

HEX ADDRESS OFFSET	ACRONYM	REGISTER NAME
4800 0000 - 487F FFFF	-	PCI Master Window 16
4880 0000 - 48FF FFFF	-	PCI Master Window 17
4900 0000 - 497F FFFF	-	PCI Master Window 18
4980 0000 - 49FF FFFF	-	PCI Master Window 19
4A00 0000 - 4A7F FFFF	-	PCI Master Window 20
4A80 0000 - 4AFF FFFF	-	PCI Master Window 21
4B00 0000 - 4B7F FFFF	-	PCI Master Window 22
4B80 0000 - 4BFF FFFF	-	PCI Master Window 23
4C00 0000 - 4C7F FFFF	-	PCI Master Window 24
4C80 0000 - 4CFF FFFF	-	PCI Master Window 25
4D00 0000 - 4D7F FFFF	-	PCI Master Window 26
4D80 0000 - 4DFF FFFF	-	PCI Master Window 27
4E00 0000 - 4E7F FFFF	-	PCI Master Window 28
4E80 0000 - 4EFF FFFF	-	PCI Master Window 29
4F00 0000 - 4F7F FFFF	-	PCI Master Window 30
4F80 0000 - 4FFF FFFF	-	PCI Master Window 31

Copyright © 2006–2012, Texas Instruments Incorporated

7.16.3 PCI Electrical Data/Timing

Texas Instruments (TI) has performed the simulation and system characterization to ensure that the PCI peripheral meets all AC timing specifications as required by the *PCI Local Bus Specification* (version 2.3). The AC timing specifications are not reproduced here. For more information on the AC timing specifications, see section 4.2.3, Timing Specification (33 MHz timing), and section 7.6.4, Timing Specification (66 MHz timing), of the *PCI Local Bus Specification* (version 2.3). Note that the C6454 PCI peripheral only supports 3.3-V signaling.

7.17 General-Purpose Input/Output (GPIO)

7.17.1 GPIO Device-Specific Information

On the C6454 device, the GPIO peripheral pins GP[15:8] and GP[3:0] are muxed with the PCI and McBSP1 peripheral pins and the SYSCLK4 signal. For more detailed information on device/peripheral configuration and the C6454 device pin muxing, see Section 3, *Device Configuration*.

7.17.2 GPIO Peripheral Register Descriptions

Table 7-102. GPIO Registers

HEX ADDRESS RANGE	ACRONYM	REGISTER NAME
02B0 0008	BINTEN	GPIO interrupt per bank enable register
02B0 000C	-	Reserved
02B0 0010	DIR	GPIO Direction Register
02B0 0014	OUT_DATA	GPIO Output Data register
02B0 0018	SET_DATA	GPIO Set Data register
02B0 001C	CLR_DATA	GPIO Clear Data Register
02B0 0020	IN_DATA	GPIO Input Data Register
02B0 0024	SET_RIS_TRIG	GPIO Set Rising Edge Interrupt Register
02B0 0028	CLR_RIS_TRIG	GPIO Clear Rising Edge Interrupt Register
02B0 002C	SET_FAL_TRIG	GPIO Set Falling Edge Interrupt Register
02B0 0030	CLR_FAL_TRIG	GPIO Clear Falling Edge Interrupt Register
02B0 008C	-	Reserved
02B0 0090 - 02B0 00FF	-	Reserved
02B0 0100 - 02B0 3FFF	-	Reserved

 Copyright © 2006–2012, Texas Instruments Incorporated

7.17.3 GPIO Electrical Data/Timing

Table 7-103. Timing Requirements for GPIO Inputs[(1) (2)]

(see Figure 7-74)

NO.			-720 -850 A-1000/-1000		UNIT
			MIN	MAX	
1	$t_{w(GPIH)}$	Pulse duration, GPIx high	12P		ns
2	$t_{w(GPIL)}$	Pulse duration, GPIx low	12P		ns

(1) P = 1/CPU clock frequency in ns. For example, when running parts at 1000 MHz, use P = 1 ns.
(2) The pulse width given is sufficient to generate a CPU interrupt or an EDMA event. However, if a user wants to have the DSP recognize the GPIx changes through software polling of the GPIO register, the GPIx duration must be extended to at least 24P to allow the DSP enough time to access the GPIO register through the CFGBUS.

Table 7-104. Switching Characteristics Over Recommended Operating Conditions for GPIO Outputs[(1)]

(see Figure 7-74)

NO.	PARAMETER		-720 -850 A-1000/-1000		UNIT
			MIN	MAX	
3	$t_{w(GPOH)}$	Pulse duration, GPOx high	36P - 8[(2)]		ns
4	$t_{w(GPOL)}$	Pulse duration, GPOx low	36P - 8[(2)]		ns

(1) P = 1/CPU clock frequency in ns. For example, when running parts at 1000 MHz, use P = 1 ns.
(2) This parameter value should not be used as a maximum performance specification. Actual performance of back-to-back accesses of the GPIO is dependent upon internal bus activity.

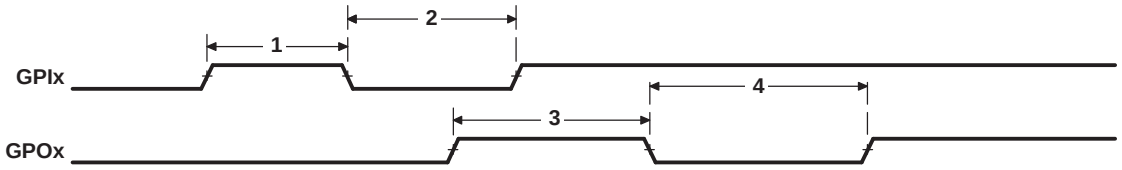

Figure 7-74. GPIO Port Timing

7.18 Emulation Features and Capability

7.18.1 Advanced Event Triggering (AET)

The C6454 device supports Advanced Event Triggering (AET). This capability can be used to debug complex problems as well as understand performance characteristics of user applications. AET provides the following capabilities:

- **Hardware Program Breakpoints:** specify addresses or address ranges that can generate events such as halting the processor or triggering the trace capture.
- **Data Watchpoints:** specify data variable addresses, address ranges, or data values that can generate events such as halting the processor or triggering the trace capture.
- **Counters:** count the occurrence of an event or cycles for performance monitoring.
- **State Sequencing:** allows combinations of hardware program breakpoints and data watchpoints to precisely generate events for complex sequences.

For more information on AET, see the following documents:

Using Advanced Event Triggering to Find and Fix Intermittent Real-Time Bugs application report (literature number SPRA753)

Using Advanced Event Triggering to Debug Real-Time Problems in High Speed Embedded Microprocessor Systems application report (literature number SPRA387)

7.18.2 Trace

The C6454 device supports Trace. Trace is a debug technology that provides a detailed, historical account of application code execution, timing, and data accesses. Trace collects, compresses, and exports debug information for analysis. Trace works in real-time and does not impact the execution of the system.

For more information on board design guidelines for Trace Advanced Emulation, see the *Emulation and Trace Headers Technical Reference Manual* (literature number SPRU655).

 Copyright © 2006–2012, Texas Instruments Incorporated

7.18.3 IEEE 1149.1 JTAG

7.18.3.1 JTAG Device-Specific Information

7.18.3.1.1 IEEE 1149.1 JTAG Compatibility Statement

For maximum reliability, the C6454 DSP includes an internal pulldown (IPD) on the $\overline{TRST}$ pin to ensure that $\overline{TRST}$ will always be asserted upon power up and the DSP's internal emulation logic will always be properly initialized when this pin is not routed out. JTAG controllers from Texas Instruments actively drive $\overline{TRST}$ high. However, some third-party JTAG controllers may not drive $\overline{TRST}$ high but expect the use of an external pullup resistor on $\overline{TRST}$. When using this type of JTAG controller, assert $\overline{TRST}$ to initialize the DSP after powerup and externally drive $\overline{TRST}$ high before attempting any emulation or boundary scan operations.

7.18.4 JTAG Peripheral Register Descriptions

7.18.5 JTAG Electrical Data/Timing

Table 7-105. Timing Requirements for JTAG Test Port

(see Figure 7-75)

NO.			-720 -850 A-1000/-1000		UNIT
			MIN	MAX	
1	$t_{c(TCK)}$	Cycle time, TCK	35		ns
3	$t_{su(TDIV-TCKH)}$	Setup time, TDI/TMS/$\overline{TRST}$ valid before TCK high	6		ns
4	$t_{h(TCKH-TDIV)}$	Hold time, TDI/TMS/$\overline{TRST}$ valid after TCK high	9		ns

Table 7-106. Switching Characteristics Over Recommended Operating Conditions for JTAG Test Port

(see Figure 7-75)

NO.	PARAMETER		-720 -850 A-1000/-1000		UNIT
			MIN	MAX	
2	$t_{d(TCKL-TDOV)}$	Delay time, TCK low to TDO valid	-3	11	ns

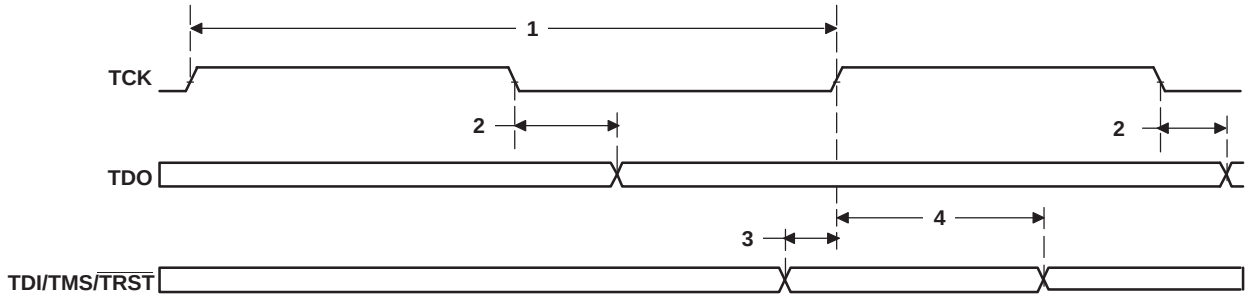

Figure 7-75. JTAG Test-Port Timing

8 Mechanical Data

8.1 Thermal Data

Table 8-1 shows the thermal resistance characteristics for the PBGA - CTZ/GTZ/ZTZ mechanical package.

Table 8-1. Thermal Resistance Characteristics (S-PBGA Package) [CTZ/GTZ/ZTZ]

NO.			°C/W	AIR FLOW (m/s)(1)
1	$R\Theta_{JC}$	Junction-to-case	1.45	N/A
2	$R\Theta_{JB}$	Junction-to-board	8.34	N/A
3	$R\Theta_{JA}$	Junction-to-free air	16.1	0.00
4			13.0	1.0
5			11.9	2.0
6			10.7	3.0
7	Psi_{JT}	Junction-to-package top	0.37	0.00
			0.89	1.0
			1.01	1.5
			1.17	3.00
8	Psi_{JB}	Junction-to-board	7.6	0.00
			6.7	1.0
			6.4	1.5
			5.8	3.00

(1) m/s = meters per second

8.2 Packaging Information

The following packaging information reflects the most current released data available for the designated device(s). This data is subject to change without notice and without revision of this document.

Copyright © 2006–2012, Texas Instruments Incorporated

PACKAGING INFORMATION

Orderable part number	Status (1)	Material type (2)	Package | Pins	Package qty | Carrier	RoHS (3)	Lead finish/ Ball material (4)	MSL rating/ Peak reflow (5)	Op temp (°C)	Part marking (6)
TMS320C6454BCTZ7	Active	Production	FCBGA (CTZ) | 697	44 | JEDEC TRAY (5+1)	Yes	SNAGCU	Level-4-245C-72HR	0 to 90	TMS @2005 TI 320C6454CTZ 7
TMS320C6454BCTZ8	Active	Production	FCBGA (CTZ) | 697	44 | JEDEC TRAY (5+1)	Yes	SNAGCU	Level-4-245C-72HR	0 to 90	TMS @2005 TI 320C6454BCTZ 8
TMS320C6454BCTZA	Active	Production	FCBGA (CTZ) | 697	44 | JEDEC TRAY (5+1)	Yes	SNAGCU	Level-4-245C-72HR	-40 to 105	TMS @2005 TI 320C6454CTZ A1GHZ
TMS320C6454BGTZA	Active	Production	FCBGA (GTZ) | 697	44 | JEDEC TRAY (5+1)	No	SNPB	Level-4-220C-72 HR	-40 to 105	TMS (@2005 TI, A1GHZ) 320C6454 GTZ

(1) **Status:** For more details on status, see our product life cycle.

(2) **Material type:** When designated, preproduction parts are prototypes/experimental devices, and are not yet approved or released for full production. Testing and final process, including without limitation quality assurance, reliability performance testing, and/or process qualification, may not yet be complete, and this item is subject to further changes or possible discontinuation. If available for ordering, purchases will be subject to an additional waiver at checkout, and are intended for early internal evaluation purposes only. These items are sold without warranties of any kind.

(3) **RoHS values:** Yes, No, RoHS Exempt. See the TI RoHS Statement for additional information and value definition.

(4) **Lead finish/Ball material:** Parts may have multiple material finish options. Finish options are separated by a vertical ruled line. Lead finish/Ball material values may wrap to two lines if the finish value exceeds the maximum column width.

(5) **MSL rating/Peak reflow:** The moisture sensitivity level ratings and peak solder (reflow) temperatures. In the event that a part has multiple moisture sensitivity ratings, only the lowest level per JEDEC standards is shown. Refer to the shipping label for the actual reflow temperature that will be used to mount the part to the printed circuit board.

(6) **Part marking:** There may be an additional marking, which relates to the logo, the lot trace code information, or the environmental category of the part.

Multiple part markings will be inside parentheses. Only one part marking contained in parentheses and separated by a "~" will appear on a part. If a line is indented then it is a continuation of the previous line and the two combined represent the entire part marking for that device.

Important Information and Disclaimer: The information provided on this page represents TI's knowledge and belief as of the date that it is provided. TI bases its knowledge and belief on information provided by third parties, and makes no representation or warranty as to the accuracy of such information. Efforts are underway to better integrate information from third parties. TI has taken and continues to take reasonable steps to provide representative and accurate information but may not have conducted destructive testing or chemical analysis on incoming materials and chemicals. TI and TI suppliers consider certain information to be proprietary, and thus CAS numbers and other limited information may not be available for release.

In no event shall TI's liability arising out of such information exceed the total purchase price of the TI part(s) at issue in this document sold by TI to Customer on an annual basis.

TRAY

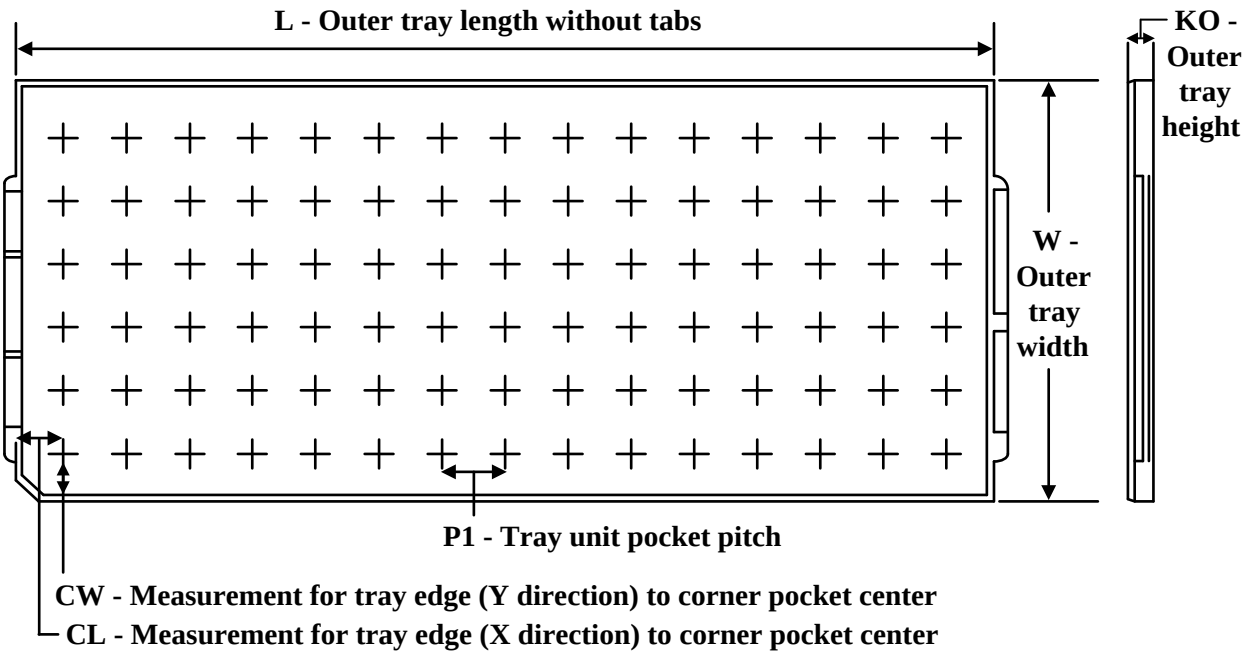

Chamfer on Tray corner indicates Pin 1 orientation of packed units.

*All dimensions are nominal

Device	Package Name	Package Type	Pins	SPQ	Unit array matrix	Max temperature (°C)	L (mm)	W (mm)	K0 (µm)	P1 (mm)	CL (mm)	CW (mm)
TMS320C6454BCTZ7	CTZ	FCBGA	697	44	4 X 11	150	315	135.9	7620	27.5	20	26.7
TMS320C6454BCTZ8	CTZ	FCBGA	697	44	4 X 11	150	315	135.9	7620	27.5	20	26.7
TMS320C6454BCTZA	CTZ	FCBGA	697	44	4 X 11	150	315	135.9	7620	27.5	20	26.7
TMS320C6454BGTZA	GTZ	FCBGA	697	44	4 X 11	150	315	135.9	7620	27.5	20	26.7

ZTZ (S–PBGA–N697) PLASTIC BALL GRID ARRAY

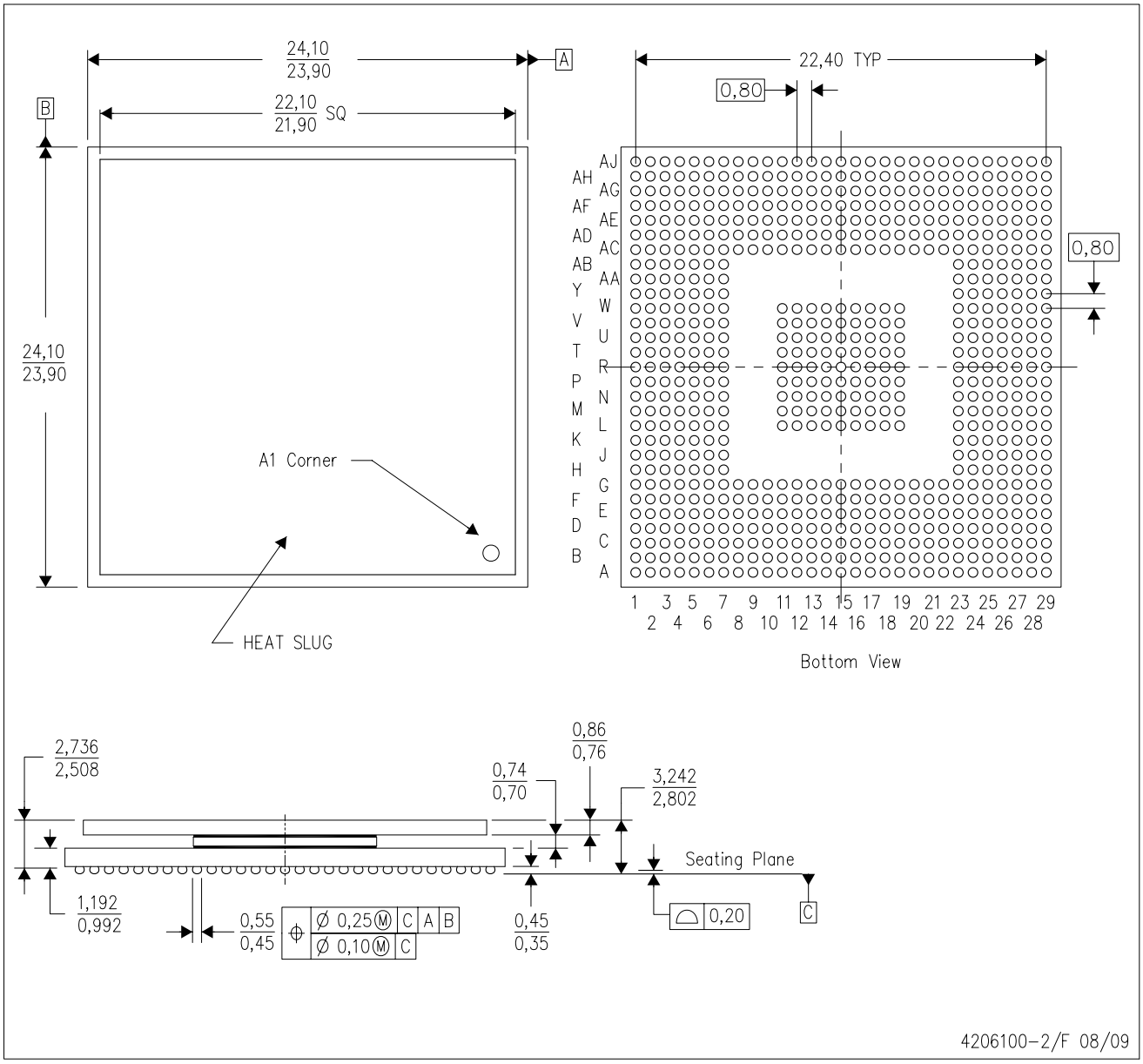

NOTES:
A. All linear dimensions are in millimeters.
B. This drawing is subject to change without notice.
C. Thermally enhanced plastic package with heat slug (HSL).
D. Flip chip application only.
E. This is a Pb–free solder ball design.

GTZ (S-PBGA-N697) PLASTIC BALL GRID ARRAY

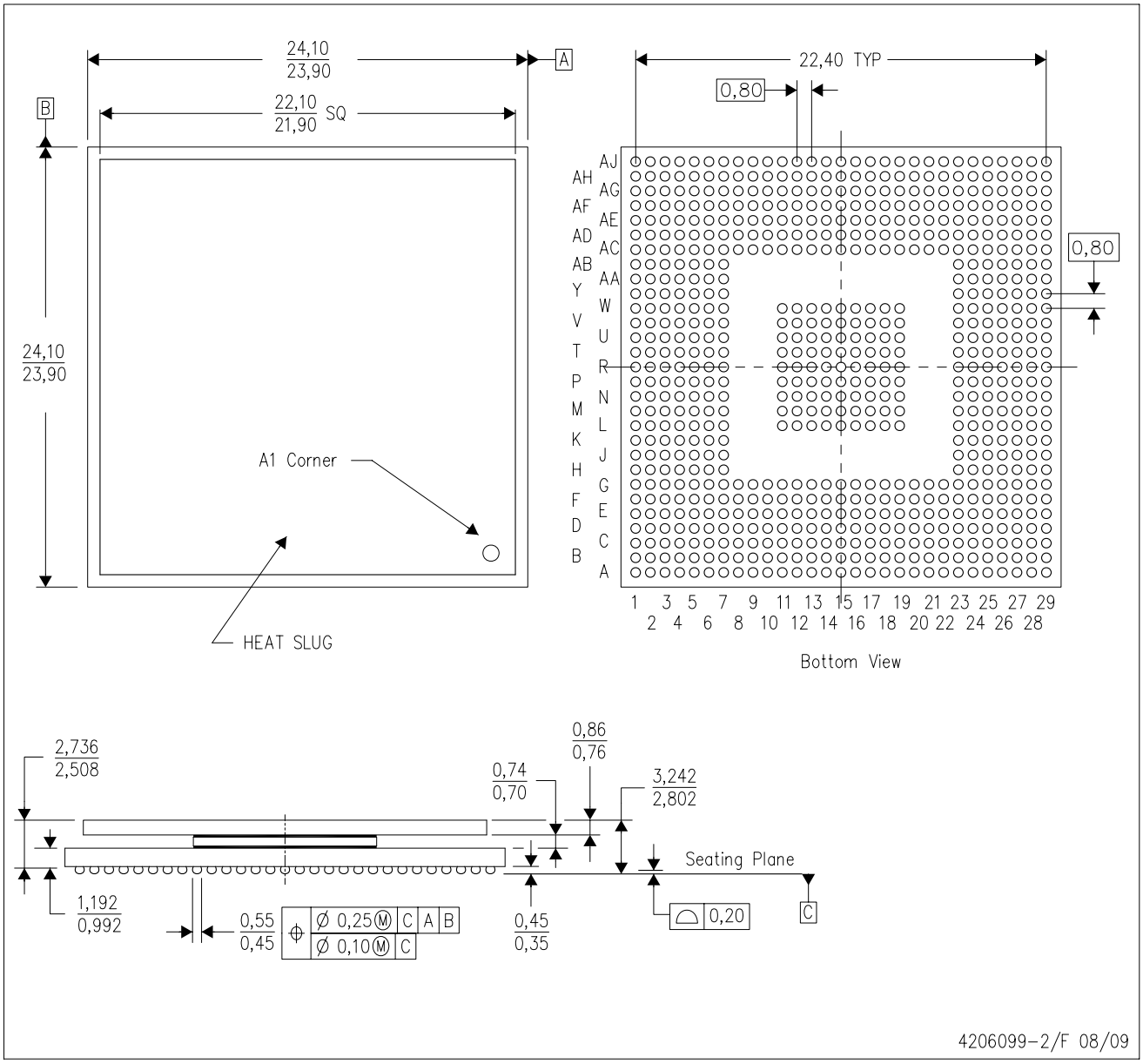

NOTES:
- A. All linear dimensions are in millimeters.
- B. This drawing is subject to change without notice.
- C. Thermally enhanced plastic package with heat slug (HSL).
- D. Flip chip application only.
- E. This is leaded solder ball design.

CTZ (S–PBGA–N697) PLASTIC BALL GRID ARRAY

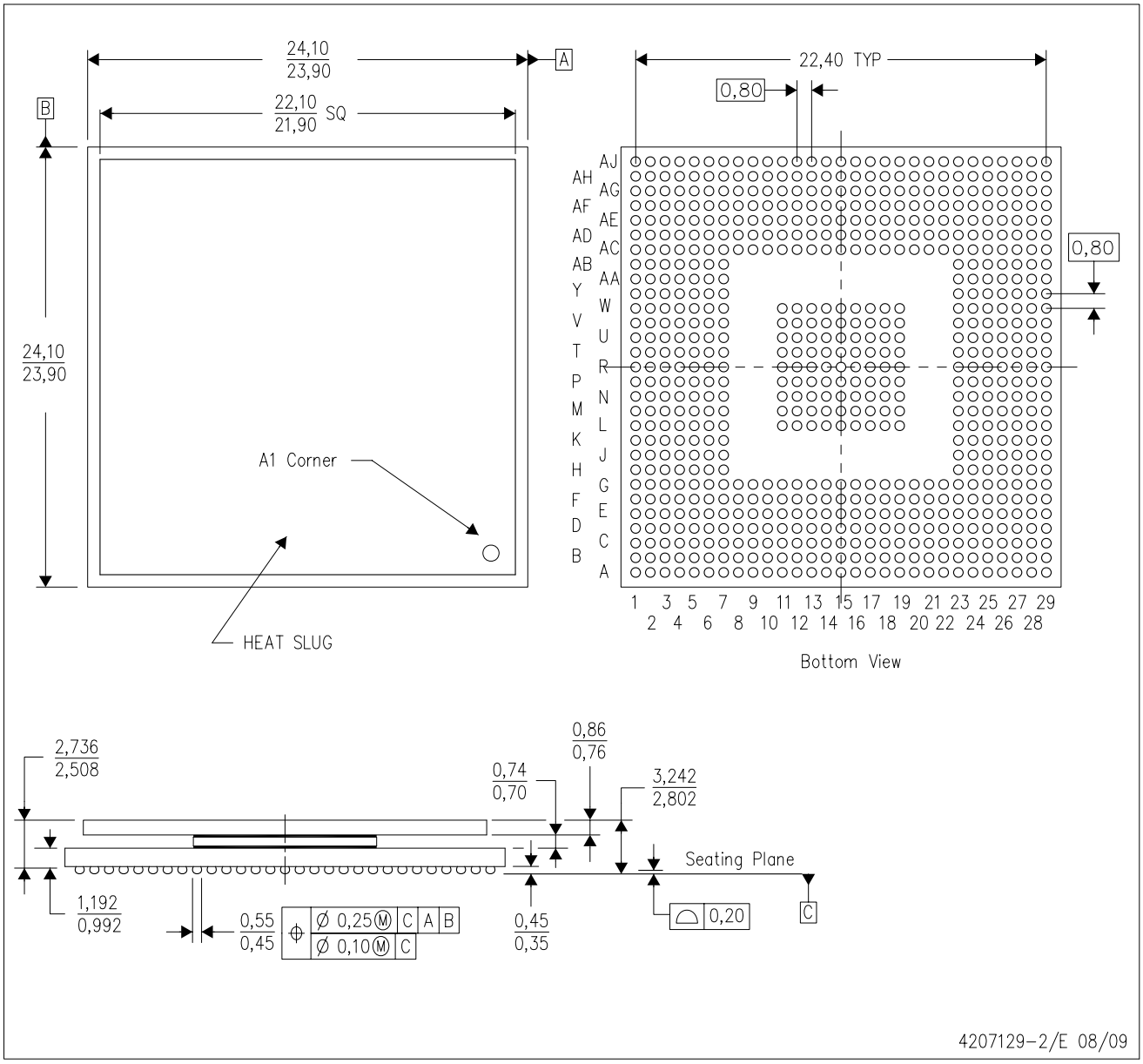

NOTES:
A. All linear dimensions are in millimeters.
B. This drawing is subject to change without notice.
C. Thermally enhanced plastic package with heat slug (HSL).
D. Flip chip application only.
E. Pb–free die bump and solder ball.

IMPORTANT NOTICE AND DISCLAIMER

TI PROVIDES TECHNICAL AND RELIABILITY DATA (INCLUDING DATA SHEETS), DESIGN RESOURCES (INCLUDING REFERENCE DESIGNS), APPLICATION OR OTHER DESIGN ADVICE, WEB TOOLS, SAFETY INFORMATION, AND OTHER RESOURCES “AS IS” AND WITH ALL FAULTS, AND DISCLAIMS ALL WARRANTIES, EXPRESS AND IMPLIED, INCLUDING WITHOUT LIMITATION ANY IMPLIED WARRANTIES OF MERCHANTABILITY, FITNESS FOR A PARTICULAR PURPOSE OR NON-INFRINGEMENT OF THIRD PARTY INTELLECTUAL PROPERTY RIGHTS.

These resources are intended for skilled developers designing with TI products. You are solely responsible for (1) selecting the appropriate TI products for your application, (2) designing, validating and testing your application, and (3) ensuring your application meets applicable standards, and any other safety, security, regulatory or other requirements.

These resources are subject to change without notice. TI grants you permission to use these resources only for development of an application that uses the TI products described in the resource. Other reproduction and display of these resources is prohibited. No license is granted to any other TI intellectual property right or to any third party intellectual property right. TI disclaims responsibility for, and you will fully indemnify TI and its representatives against, any claims, damages, costs, losses, and liabilities arising out of your use of these resources.

TI’s products are provided subject to TI’s Terms of Sale or other applicable terms available either on ti.com or provided in conjunction with such TI products. TI’s provision of these resources does not expand or otherwise alter TI’s applicable warranties or warranty disclaimers for TI products.

TI objects to and rejects any additional or different terms you may have proposed.

Mailing Address: Texas Instruments, Post Office Box 655303, Dallas, Texas 75265
Copyright © 2025, Texas Instruments Incorporated