TechNexion
INNOVATORS OF TECHNOLOGY

VLI-OV5640-CB

- OmniVision OV5640 5MP Rolling Shutter Sensor
- C-Mount for Interchangeable Lenses
- FAKRA Automotive Connector
- Plug & Play with Linux OS & Yocto

Specifications

Camera Information

CMOS Sensor	OmniVision OV5640
Active Pixels	2592 (H) x 1944 (V) = 5MP
Pixel Size	1.4 µm x 1.4 µm
Optical Format	1/4” (Diagonal 4.6 mm)
Shutter Type	Rolling Shutter
Chromaticity	Color
Illuminated type	Back Side Illuminated (BSI)
Maximum Frame Rate (UYVY)	2592 x 1944 @ 15 fps 1920 x 1080 @ 30 fps 1280 x 720 @ 60 fps 640 x 480 @ 60 fps
Maximum S/N Ratio	36 dB
Output Format	UYVY

Camera Interface

Connector	FAKRA SMB Jack Z-Code
Serial Link	FPD-Link III

Power

Supply Voltage	12V ± 5%
Power Consumption	UYVY 2592 x 1944 @ 15 fps ≤ 0.9W
Standby Power	≤ 0.1W Standby

Software Support

Platform Support	x86 Intel / AMD NXP i.MX8M Mini / Plus NXP i.MX93 TI Sitara™ AM62x / AM62A TI Jacinto™ TDA4VM / TDA4VA / TDA4VH NVIDIA Jetson Nano NVIDIA Xavier NX NVIDIA Orin Nano/NX
Operation Systems	Linux Yocto
SDK	VizionViewer™ SDK

Environmental and Mechanical

Dimensions	29.5(W) x 29.5(H) x 37.5(D) mm
Weight	40 grams
Relative Humidity	10 to 90 %
MTBF	50,000 Hours
Shock	15G half-sine 11 ms duration
Operating Temperature	-30°C to +70°C
Vibration	1 Grms random 5-500Hz hr/axis

Certification and Compliance

Certification	Compliant with CE / FCC / RoHS / REACH directives

2023-06-07 – All specifications are subject to change without notice. © TechNexion – All rights reserved worldwide.

Spectral Characteristics

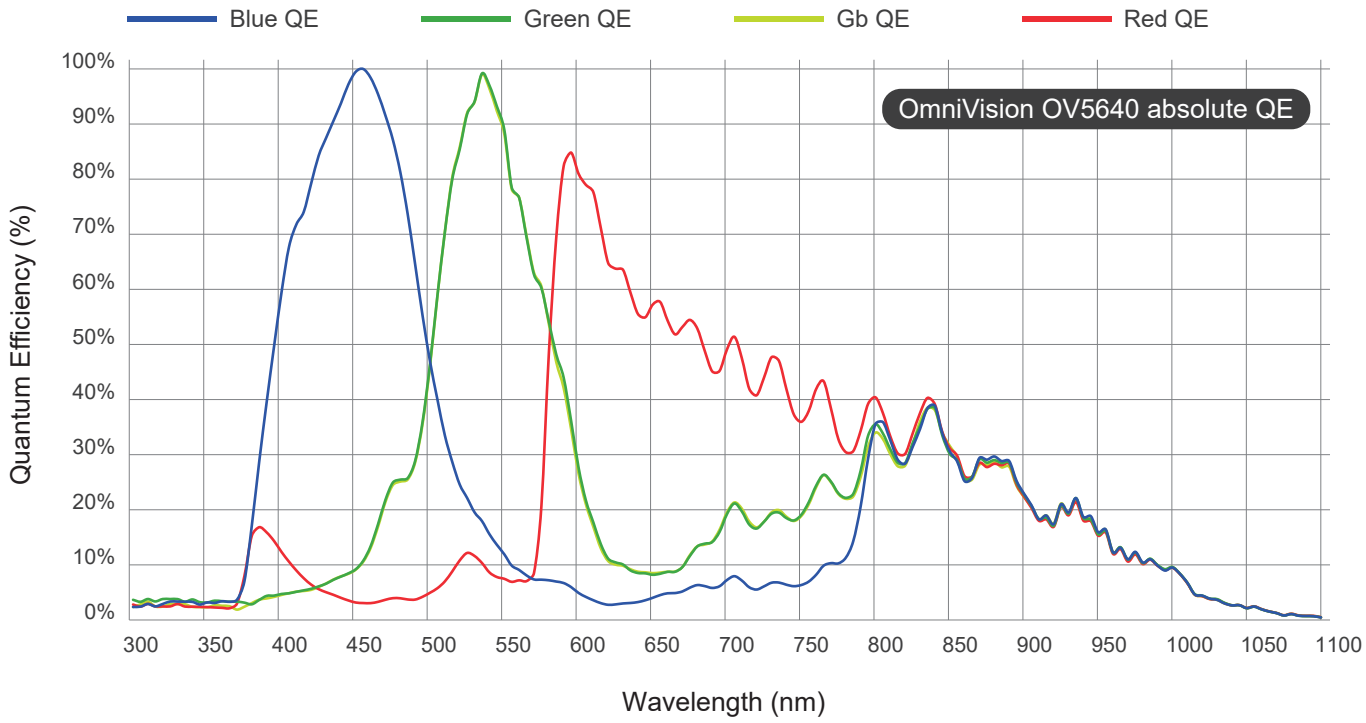

Block Diagram

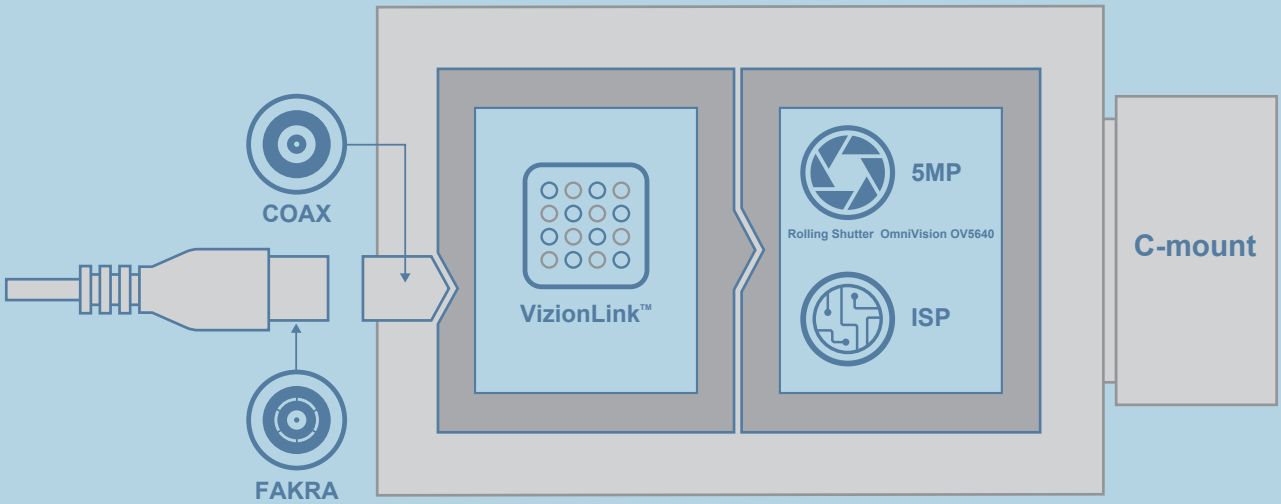

TechNexion
INNOVATORS OF TECHNOLOGY

For more information:
www.technexion.com sales@technexion.com

2023-06-07 – All specifications are subject to change without notice. © TechNexion – All rights reserved worldwide.

Dimensions (units in mm)

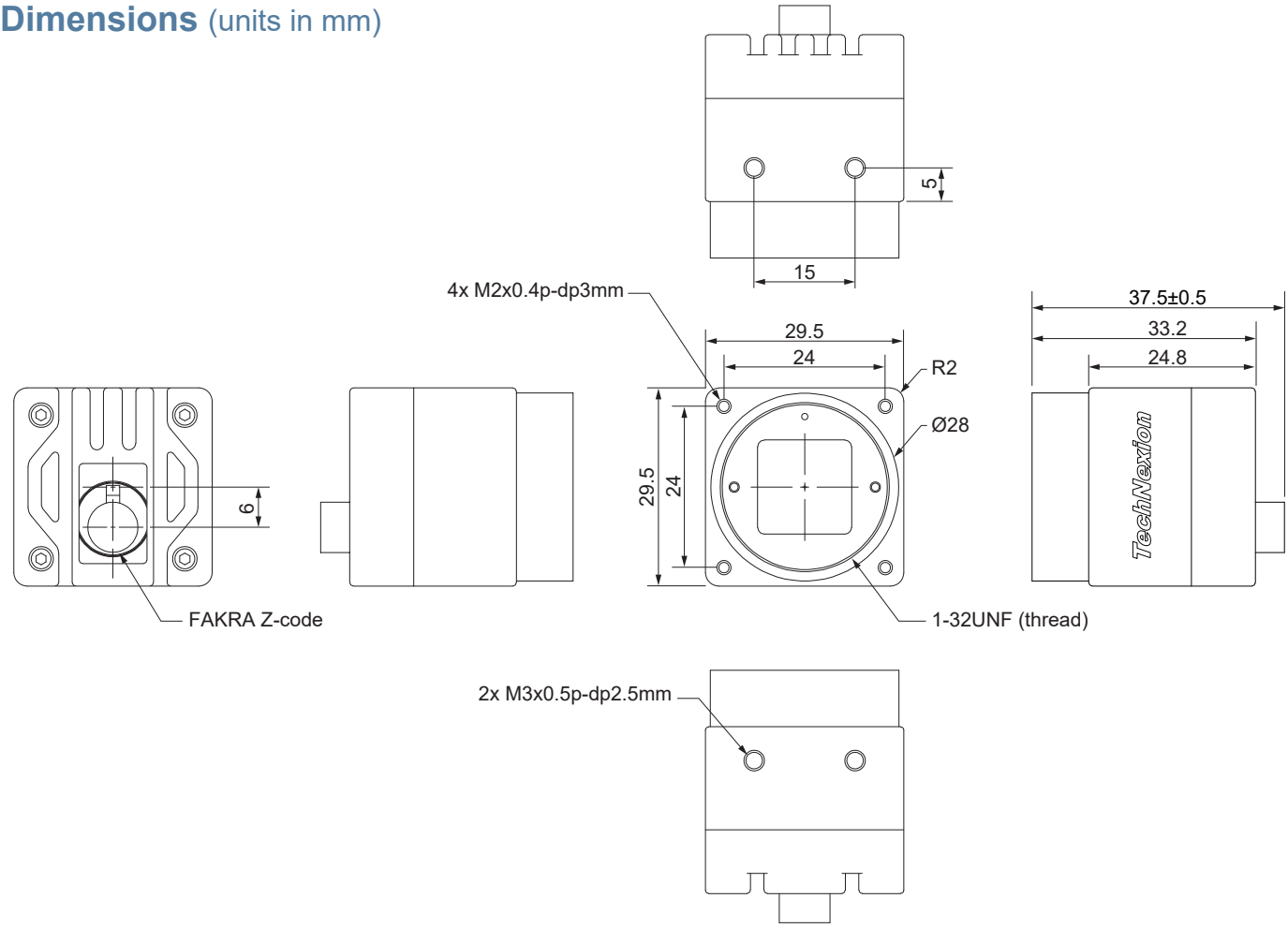

Order Information

VLI-OV5640-x-CB-xx

Part Number Rules

Option	Code	Description
Chromaticity	C	Color
Filter	-	-
	IR	IR Cut Filter 650nm

For customization, please contact your TechNexion sales representative.

Optional Accessories

VCI-MOUNT-BRACKET-A
An easy to attach A-Mount bracket for TechNexion USB3 cameras.

VCI-MOUNT-BRACKET-A

VCI-MOUNT-BRACKET-A on tripod
(tripod not included)

2023-06-07 – All specifications are subject to change without notice. © TechNexion – All rights reserved worldwide.

Custom Lens Solutions

Our C-mount cameras can be paired with a variety of off-the-shelf lenses. Customers are welcome to choose their own, or alternatively our engineers are on standby to assist with selecting the right camera lens for different applications.

Please contact your TechNexion sales representative to start a discussion on how we can help you.

FPD-Link III Frame Grabbers

Adding TechNexion FPD-Link III cameras to an existing x86 Intel or AMD based system couldn't be easier by using our full range frame grabber cards.

- **Available in 1 / 2 / 4 / 8 port FPD-Link III camera frame grabber configuration**
- **Fits in a standard PCI Express Gen 3 slot**
- **Plug-n-Play driver-less UVC based solution**
- **Complete Fanless design with brushed aluminium thermal solution**
- **Comes with TechNexion Vizionviewer™ SDK**

UVC-VL-3100

PCIE-VL-3120

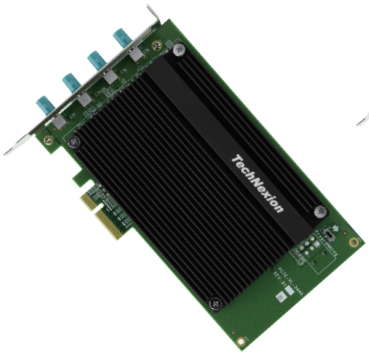

PCIE-VL-3440

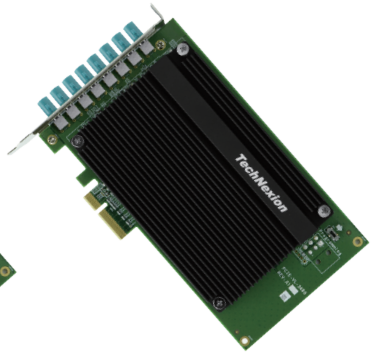

PCIE-VL-3480

TechNexion
INNOVATORS OF TECHNOLOGY

For more information:
www.technexion.com sales@technexion.com

2023-06-07 – All specifications are subject to change without notice. © TechNexion – All rights reserved worldwide.

TEK-8021-NX / TEK-60xx-ORIN

Nvidia Jetson NX/Orin Solutions

x24

- **Nvidia Xavier NX Systems**
- **Nvidia Orin Nano / NX Systems**
- **Up-to 24 FPD-Link III camera solutions**
- **Nvidia Jetpack driver integration**
- **TechNexion Vizionviewer™ SDK**

TRAQ-4VM

Texas Instruments TDA4VM Robotic AMR Solution

x8

- **TI TDA4VM**
- **Up-to 8 FPD-Link III cameras**
- **FPD-Link III Display**
- **Single Pair Ethernet (SPE) sensor network extension**
- **Linux / Debian support**
- **TechNexion Vizionviewer™ SDK**

TEP6-xxx-IMX8MP

NXP i.MX8M Plus based HMI Family

x2

- **NXP i.MX8M Plus HMI solution**
- **Available as 15” / 15.6” / 21.5” Display solution**
- **Up-to 2 FPD-Link III cameras**
- **FPD-Link III remote Display**
- **Linux / Debian / Android support**
- **TechNexion Vizionviewer™ SDK**

TEK6-xxx-IMX8MP

NXP i.MX8M Plus based Edge Computing Gateway System

x2

- **NXP i.MX8M Plus Edge Computing**
- **Available with By-pass Ethernet solution**
- **Extensive low-speed I/O availability**
  - **GPIO / UART / CAN / USB**
- **Up-to 2 FPD-Link III cameras**
- **Linux / Debian / Android support**
- **TechNexion Vizionviewer™ SDK**

TechNexion
INNOVATORS OF TECHNOLOGY

For more information:
www.technexion.com sales@technexion.com

2023-06-07 – All specifications are subject to change without notice. © TechNexion – All rights reserved worldwide.