THIS DRAWING IS UNPUBLISHED. RELEASED FOR PUBLICATION ,19 .
© COPYRIGHT 19 BY AMP INCORPORATED. ALL RIGHTS RESERVED.

LOC	DIST
AJ	16

REVISIONS

P	LTR	DESCRIPTION	DATE	DWN	APVD
	0	RELEASED CUSTOMER DRAWING PER 0503-0324-97	6-3-97	JG	SB

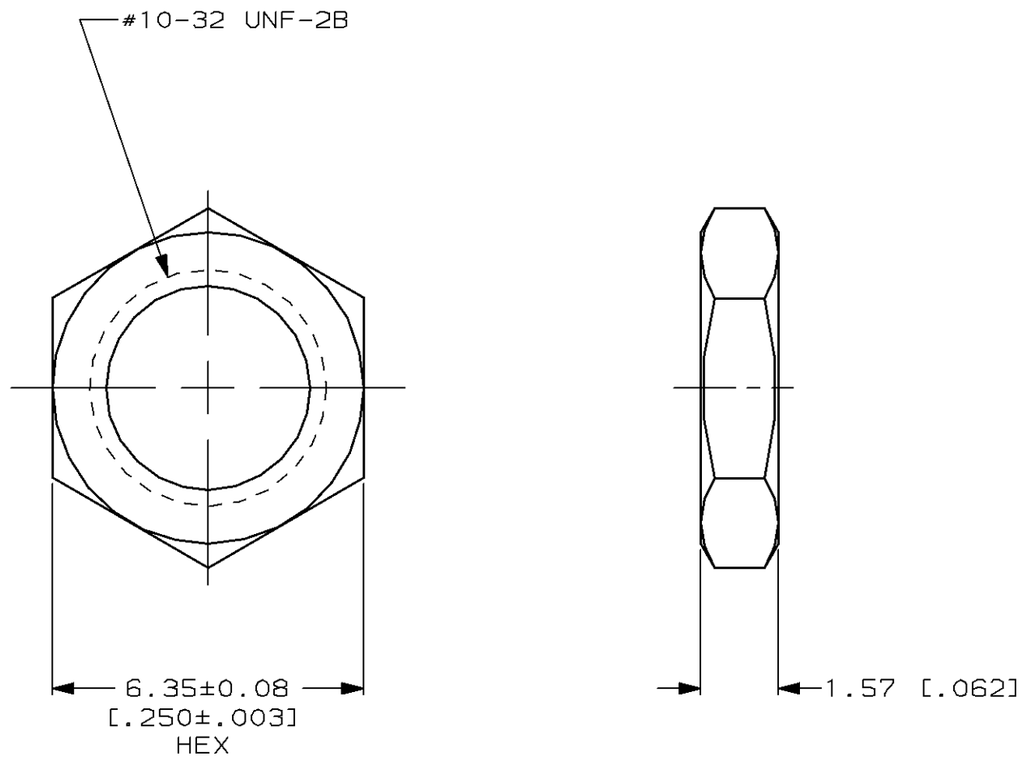

1. MATERIAL: BRASS PER (QQ-B-626)
2. 2.54 µm [.000100] MIN THK NICKEL PLATE OVER
   1.27 µm [.000050] MIN THK COPPER PLATE
3. 0.76 µm [.000030] MIN THK GOLD PLATE OVER
   2.54 µm [.000100] MIN THK NICKEL PLATE OVER
   1.27 µm [.000050] MIN THK COPPER PLATE

3	414969-3
2	414969-2
FINISH	PART NUMBER

THIS DRAWING IS A CONTROLLED DOCUMENT.

DIMENSIONS: mm [INCHES]

TOLERANCES UNLESS OTHERWISE SPECIFIED:
0 PLC ±-
1 PLC ±-
2 PLC ±0.13 [.005]
3 PLC ±-
4 PLC ±-
ANGLES ±-

MATERIAL 1

FINISH 2 3

DWN J.L.GROFT 6-3-97
CHK S.W.BURKHOLDER 6-3-97
APVD S.W.BURKHOLDER 6-3-97
PRODUCT SPEC –
APPLICATION SPEC –
WEIGHT –

CUSTOMER DRAWING

AMP Incorporated
Harrisburg, PA 17105-3608

NAME: JAM NUT

SIZE	CAGE CODE	DRAWING NO
A3	00779	C-414969

SCALE 8:1 SHEET 1 OF 1 REV 0

AMP 1470-19 REV 23FEB95