THIS DRAWING IS UNPUBLISHED. RELEASED FOR PUBLICATION -,- .
© COPYRIGHT - By - ALL RIGHTS RESERVED.

REVISIONS

P	LTR	DESCRIPTION	DATE	DWN	APVD
	N1	REVISED PER ECR-19-012985	20AUG2019	ED	RS

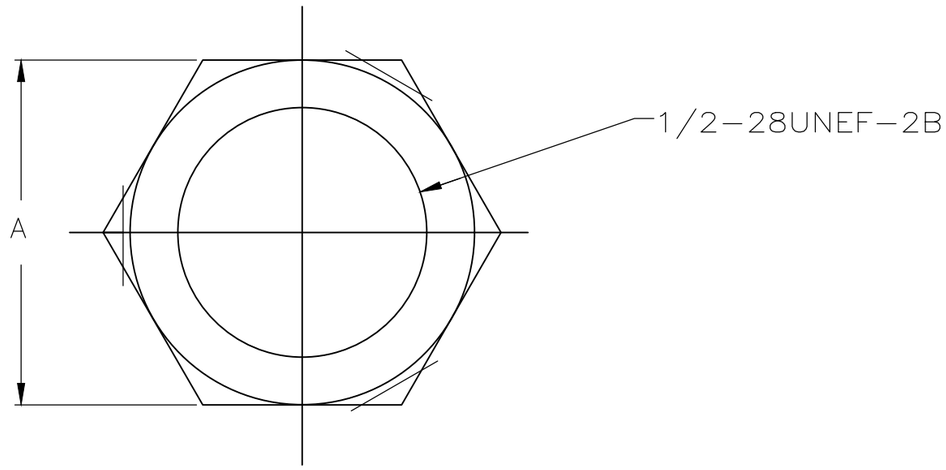

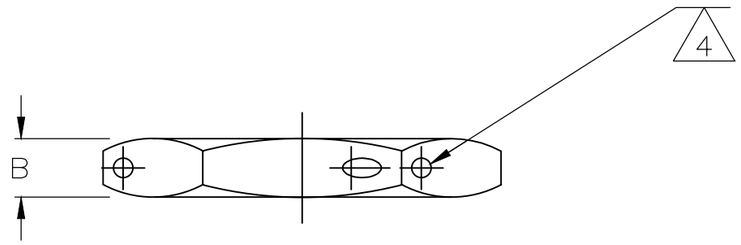

	B	A	HOLES	FINISH	MATERIAL	PART NUMBER
7	2.39±0.15[.094±.006]	14.10±0.25[.555±.010]		3	1	9-329631-3
	2.77[.109]	15.88[.625]		2	1	9-329631-2
	2.39±0.15[.094±.006]	14.10±0.25[.555±.010]	4	6	1	9-329631-1
	2.39±0.15[.094±.006]	14.10±0.25[.555±.010]		6	1	9-329631-0
	2.77[.109]	15.88[.625]		5	1	2-329631-2
	2.39±0.15[.094±.006]	14.10±0.25[.555±.010]		3	1	2-329631-1
	2.77[.109]	15.88[.625]		3	1	2-329631-0
	2.77[.109]	15.88[.625]		2	1	1-329631-9
	2.39±0.15[.094±.006]	14.10±0.25[.555±.010]	4	6	1	1-329631-7
	2.39±0.15[.094±.006]	14.10±0.25[.555±.010]		3	1	1-329631-2
	2.39±0.15[.094±.006]	14.10±0.25[.555±.010]		6	1	329631

1. BRASS PER QQ-B-627.
2. SILVER PLATE PER QQ-S-365, 5.08μm[.000200] MINIMUM THICK.
3. NICKEL PLATE PER QQ-N-290, 2.54μm[.000100] MINIMUM THICK.
4. ∅0.79±0.08[.031±.003] (3 HOLES) 120° APART.
5. GOLD PLATE PER MIL-G-45204, 0.51μm[.000020] MINIMUM THICK.
6. SILVER PLATE PER QQ-S-365, 2.54μm[.000100] MINIMUM THICK.
7. 10PCS PER LABELED BAG,100 BAGS PER LABELED INNER CARTON(1000) AND 10 INNER CARTONS(10000) PER SHIP BOX.

THIS DRAWING IS A CONTROLLED DOCUMENT.

DIMENSIONS: mm [INCHES]

TOLERANCES UNLESS OTHERWISE SPECIFIED:
0 PLC ±-
1 PLC ±-
2 PLC ± 0.13[.005]
3 PLC ±-
4 PLC ±-
ANGLES ±-

MATERIAL 1
FINISH 2 & 3

DWN P. ALSEDEK 16MAY90
CHK R.E. RUTH 06SEP90
APVD M. PHILLIPS 20SEP90
PRODUCT SPEC —
APPLICATION SPEC —
WEIGHT 0.000000

TE Connectivity

NAME JAM NUT
—

SIZE A3 | CAGE CODE 00779 | DRAWING NO C-329631 | RESTRICTED TO —

CUSTOMER DRAWING | SCALE 4:1 | SHEET 1 OF 1 | REV N1