THIS DRAWING IS UNPUBLISHED. RELEASED FOR PUBLICATION -,- .
© COPYRIGHT - By - ALL RIGHTS RESERVED.

REVISIONS

P	LTR	DESCRIPTION	DATE	DWN	APVD
	H3	REVISED PER ECO-15-013169	16NOV2015	RZ	RS

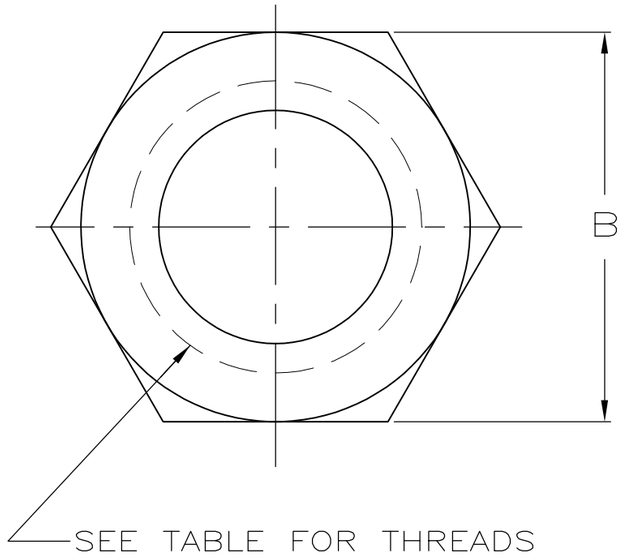

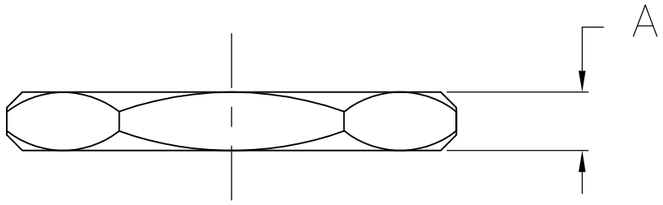

△1 SILVER PL PER QQ-S-365, 2.54μm [.000100] MIN THICK.

△2 NICKEL PL PER QQ-N-290, 2.54μm [.000100] MIN THICK.

△3 BRASS PER QQ-B-626

△4 SEE SEPERATE RESTRICTED CUSTOMER DRAWING WITH THIS PART NUMBER.

△5 BLACK NICKEL PLATE.

	B	A	THREADS	FINISH	PART NUMBER
	.496±.008	3.18 [.125]	3/8-32 UNEF-2B	△1	9-330249-0
	.433±.006	1.91 [.075]	3/8-32 UNEF-2B	△2	2-330249-2
	.496±.008	1.91 [.075]	3/8-24 UNEF-2B	△5	1-330249-8
	.496±.008	2.36 [.093]	3/8-32 UNEF-2B	△2	1-330249-7
△4	–	–	–	–	1-330249-5
	.496±.008	1.91 [.075]	3/8-24 UNEF-2B	△2	1-330249-4
	.496±.008	3.18 [.125]	3/8-32 UNEF-2B	△2	1-330249-1
REPLACED BY 9-330249-0 OBSOLETE	.496±.008	3.18 [.125]	3/8-32 UNEF-2B	△1	330249

THIS DRAWING IS A CONTROLLED DOCUMENT.

DIMENSIONS: INCHES

TOLERANCES UNLESS OTHERWISE SPECIFIED:
0 PLC ± –
1 PLC ± –
2 PLC ± –
3 PLC ± 0.41 [.016]
4 PLC ± –
ANGLES ± –

MATERIAL △1

FINISH SEE TABLE

DWN M. SNEED 6-26-91
CHK R. HENRY 6-26-91
APVD – –
PRODUCT SPEC –
APPLICATION SPEC –
WEIGHT –

TE Connectivity

NAME JAM NUT

SIZE	CAGE CODE	DRAWING NO	RESTRICTED TO
A3	00779	C-330249	–

CUSTOMER DRAWING

SCALE 5:1 SHEET 1 OF 1 REV H3