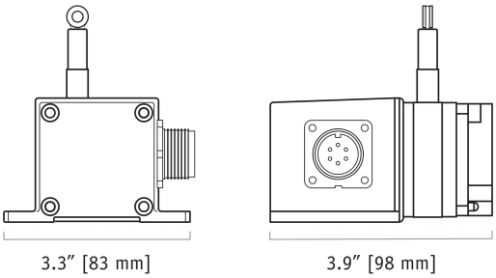

PT1A

Cable Actuated Sensor
Instrument Grade • Voltage Divider Output

Absolute Linear Position to 50 inches (1270 mm)

Aluminum and Polycarbonate Enclosure

Compact Design

IP65 • NEMA 4 Protection

The PT1A is perfect where space and money are limited. The PT1A is part of Celesco's compact line of cable-extension transducers. Using a high cycle plastic-hybrid potentiometer, the PT1A provides a precision voltage divider position feedback signal for full-scale measurement ranges from 2 to 50 inches.

The PT1A has many features to offer including 500 to 10K ohm potentiometer selection, adjustable bridge circuit and multiple measuring cable exit options.

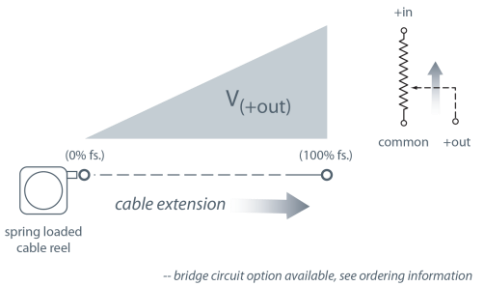

General

Full Stroke Range Options	0-2 to 0-50 inches
Output Signal Options	voltage divider (potentiometer)
Accuracy	± 0.25% to ± 0.15% full stroke (see ordering information)
Repeatability	± 0.02% full stroke
Resolution	essentially infinite
Measuring Cable	.019-in. dia. nylon-coated stainless steel
Enclosure	glass-filled polycarbonate and black anodized aluminum
Sensor	plastic-hybrid precision potentiometer
Potentiometer Cycle Life	see ordering information
Maximum Retraction Acceleration	see ordering information
Weight	1 lb. max.

Electrical

Input Resistance Options	see ordering information
Power Rating, Watt	see ordering information
Recommended Maximum Input Voltage	see ordering information
Output Signal Change Over Full Stroke Range	94% ±4% of input voltage

Environmental

Enclosure	NEMA 4, IP 65
Operating Temperature	-40° to 200°F (-40° to 90°C)
Vibration	up to 10 g to 2000 Hz maximum

Outline Drawing

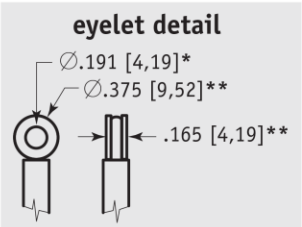

Range	A
2, 10	1.04 [26,4]
5, 25, 50	0.58 [14,7]
15, 30	0.82 [20,8]
20, 40	0.74 [18,8]

inches [mm]

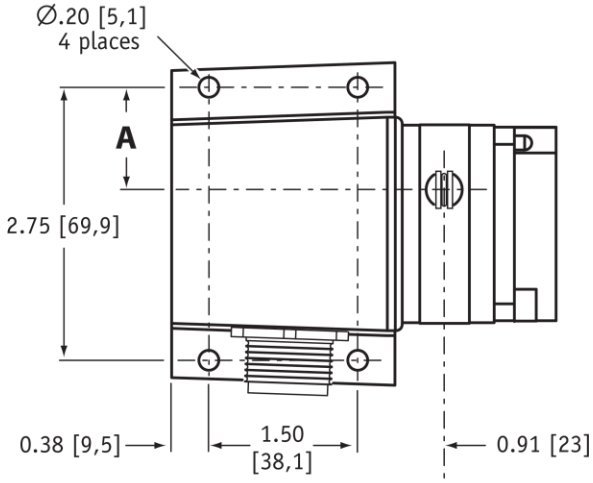

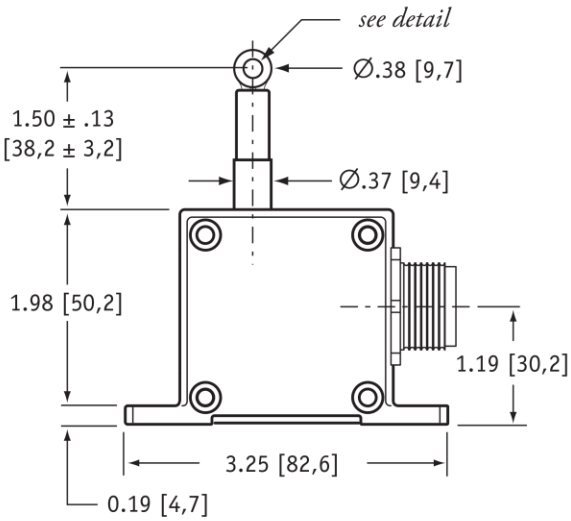

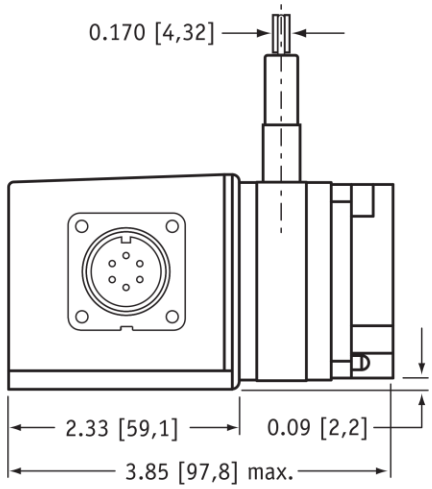

DIMENSIONS ARE IN INCHES [MM]
tolerances are 0.03 IN. [0.5 MM] unless otherwise noted.

* tolerance = +.005 –.001 [+.13 –.03]
** tolerance = +.005 –.005 [+.13 –.13]

Ordering Information

Model Number:

PT1A - _____ - _____ - _____ - _____ - _____
order code: Ⓡ Ⓐ Ⓑ Ⓒ Ⓓ

Sample Model Number:

PT1A - 30 - UP - 500 - MC4 - SG

Ⓡ	range:	30 inches
Ⓐ	measuring cable exit:	up
Ⓑ	output signal:	500-ohm pot.
Ⓒ	electrical connection:	4-pin micro connector
Ⓓ	cable guide:	spring-loaded guide

Full Stroke Range:

Ⓡ *order code:*	2	5	10	15	20	25	30	40	50
full stroke range, min:	2 in.	5 in.	10 in.	15 in.	20 in.	25 in.	30 in.	40 in.	50 in.
accuracy (% of f.s.):	0.25%		0.15%				0.10%		
potentiometer cycle life:	2,500,000 cycles		500,000 cycles				250,000 cycles		
cable tension (20%):	12 oz.	5 oz.	12 oz.	9 oz.	6 oz.	5 oz.	9 oz.	6 oz.	5 oz.
max. cable acceleration:	11 g	3 g	11 g	5 g	4 g	3 g	5 g	4 g	3 g

Cable Exit:

Ⓐ order code:	UP	DN	FR	BK
direction:	up	down	front	back

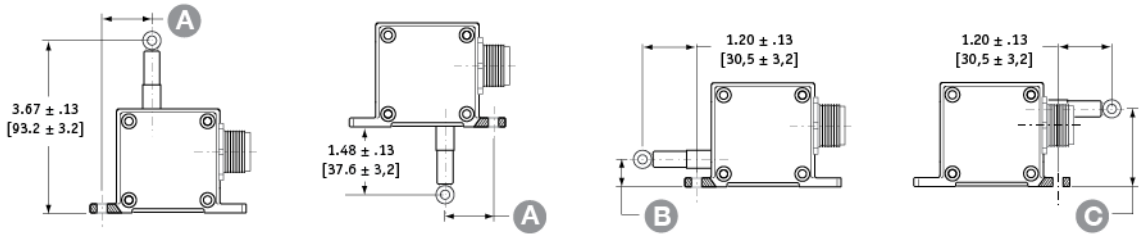

measurement range —	2	5	10	15	20	25	30	40	50
A	1.04 in. 26,4 mm	0.58 in. 14,7 mm	1.04 in. 26,4 mm	0.82 in. 20,8 mm	0.74 in. 18,8 mm	0.58 in. 14,7 mm	0.82 in. 20,8 mm	0.74 in. 18,8 mm	0.58 in. 14,7 mm
B	0.75 in. 19,1 mm	0.29 in. 6,1 mm	0.75 in. 19,1 mm	0.53 in. 13,5 mm	0.45 in. 11,5 mm	0.29 in. 6,1 mm	0.53 in. 13,5 mm	0.45 in. 11,5 mm	0.29 in. 6,1 mm
C	1.43 in. 36,3 mm	1.89 in. 48,0 mm	1.43 in. 36,3 mm	1.65 in. 41,9 mm	1.73 in. 43,9 mm	1.89 in. 48,0 mm	1.65 in. 41,9 mm	1.73 in. 43,9 mm	1.89 in. 48,0 mm

Output Signals:

Ⓑ order code:	500	1K	5K	10K	AB
	500 ohm*	1000 ohm*	5000 ohm*	10,000 ohm*	adjustable bridge (0...30 mV/V)

**tolerance = ±10%*

max. input voltage and power rating, options: 500, 1K, 5K, 10K

	2-inch, 5-inch range	*10-inch to 50-inch range*
500-ohms:	20 V AC/DC (1 W)	30 V AC/DC (2 W)
1K to 10K-ohms:	30 V AC/DC (1 W)	30 V AC/DC (2 W)

circuit options: 500, 1K, 5K, 10K

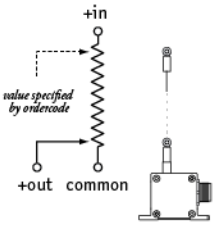

circuit option: AB (adjustable bridge)

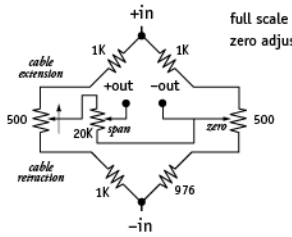

full scale output: adjustable from 0 to 30mV/V
zero adjust: to 50% of full stroke

Electrical Connection:

Ⓒ order code:	MC4	M6	C25
	4-pin micro-connector with 12 ft [3.5 M] cordset	6-pin plastic connector with mating plug	25-ft. instrumentation cable 24 AWG, shielded

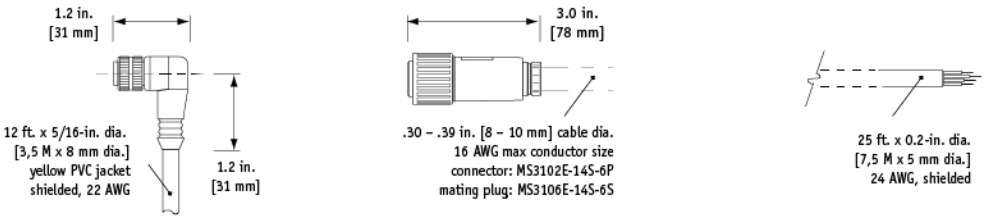

4-pin mating plug and cord set:

contact view

pin	color code	standard	bridge
1	RED-BLK TR.	+IN	+IN
2	RED-WHT TR.	COMMON	-IN
3	RED	+OUT	+OUT
4	GREEN	-	-OUT

6-pin mating plug:

contact view

pin	standard	bridge
A	+IN	+IN
B	COMMON	-IN
C	+OUT	-OUT
D	-	+OUT

25-ft. cable:

color code	standard	bridge
RED	+IN	+IN
BLACK	COMMON	-IN
GREEN	+OUT	+OUT
WHITE	-	-OUT

Cable Guide:

order code:	blank	SG
	standard cable guide	spring-loaded guide
		cable-guide cushions impact from accidental free release

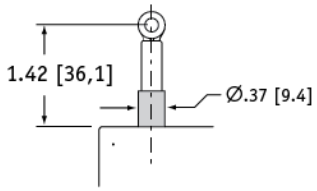

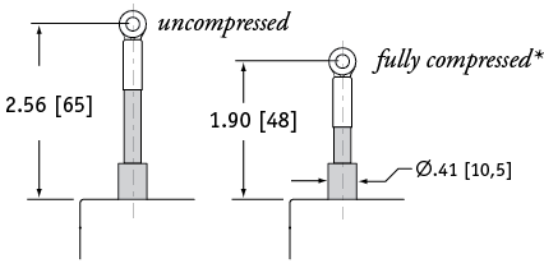

**note: start of full stroke range begins at full compression point (except 2-inch and 5-inch ranges).*

NORTH AMERICA

Measurement Specialties, Inc.,
a TE Connectivity company
20630 Plummer Street
Chatsworth, CA 91311
Tel +1 800 423 5483
Tel +1 818 701 2750
Fax +1 818 701 2799
info@celesco.com

TE.com/sensorsolutions

Measurement Specialties, Inc., a TE Connectivity company.

Measurement Specialties, TE Connectivity, TE Connectivity (logo) and EVERY CONNECTION COUNTS are trademarks. All other logos, products and/or company names referred to herein might be trademarks of their respective owners.

The information given herein, including drawings, illustrations and schematics which are intended for illustration purposes only, is believed to be reliable. However, TE Connectivity makes no warranties as to its accuracy or completeness and disclaims any liability in connection with its use. TE Connectivity's obligations shall only be as set forth in TE Connectivity's Standard Terms and Conditions of Sale for this product and in no case will TE Connectivity be liable for any incidental, indirect or consequential damages arising out of the sale, resale, use or misuse of the product. Users of TE Connectivity products should make their own evaluation to determine the suitability of each such product for the specific application.

© 2015 TE Connectivity Ltd. family of companies All Rights Reserved.

PT1A 12/01/2015