THIS COPY IS PROVIDED ON A RESTRICTED BASIS AND IS NOT TO BE USED IN ANY WAY DETRIMENTAL TO THE INTERESTS OF PANDUIT CORP.

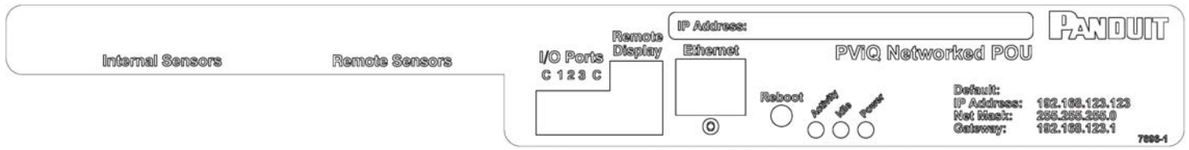

DETAIL A
(SCALE 4X)

PANDUIT P/N	WEIGHT
QM0A1C0BA30P1	17 lb (7.7 kg)

NOTES:

1. IDENTIFICATION: VERTICAL, MIXED (24) C-13 & (6) C-19
NETWORKED & ENVIRONMENTAL MONITORED (EXPANDED)
120V / 20A / SINGLE-PHASE POU

PART NO.	COLOR
QM0A1C0BA30P1	BLACK

2. ACCESSORY COMPONENTS:
(4) #10-32 x 1/2" MOUNTING SCREWS
(4) #12-24 x 1/2" MOUNTING SCREWS
(2) #10-32 LOCKING COLLAR SCREWS
(2) L-BRACKETS
(1) I/0 INSERTION TOOL

3. DIMENSIONS IN PARENTHESES ARE METRIC (mm).

4. AGGREGATE POWER (A,V,PF,KWH) MONITORING CAN BE ACCESSED REMOTELY VIA ETHERNET CONNECTION OR VIA OPTIONAL REMOTE DISPLAY (PVQ-RD). IN ADDITION, ENVIRONMENTAL SENSOR DATA CAN ALSO BE ACCESSED REMOTELY VIA ETHERNET CONNECTION. (EXPANDED) UNITS HAVE 5 ON-BOARD SENSORS THAT MEASURE TEMPERATURE, RELATIVE HUMITIDY, AIR FLOW, LIGHT, AND SOUND.

5. UL® & c-UL® LISTED 60950.

6. RoHS COMPLIANT.

7. VISIT OUR ON-LINE CATALOG AT WWW.PANDUIT.COM FOR A CURRENT LIST OF PRODUCTS APPLICABLE FOR USE WITH THIS PART.

8. MAXIMUM AVAILABLE POWER = 1.9 KW

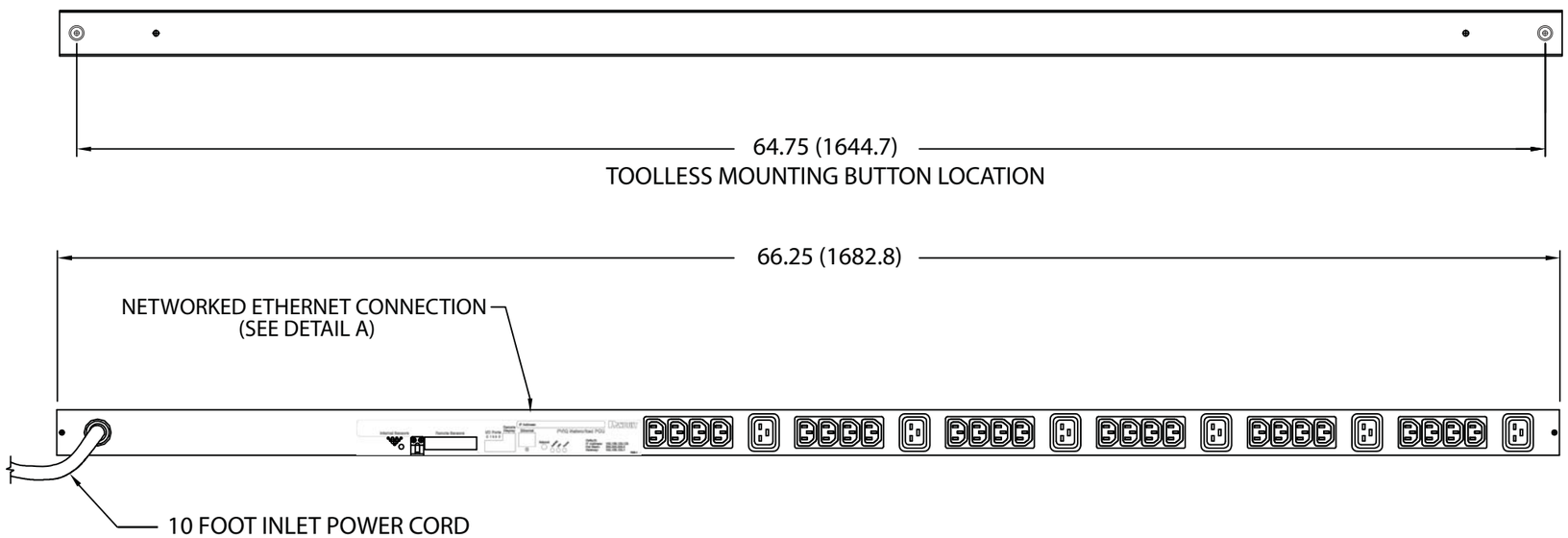

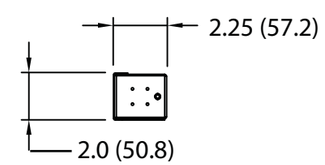

PLUG
20 AMP, 125V, SINGLE-PHASE
STRAIGHT BLADE
NEMA 5-20P

TWENTY-FOUR (24)
RECEPTACLES
15 AMP, 250V
STRAIGHT BLADE
IEC 60320/C13

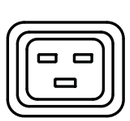

SIX (6)
RECEPTACLES
20 AMP, 250V
STRAIGHT BLADE
IEC 60320/C19

REV	DATE	BY	CHK	DESCRIPTION	ECN - R	CUST	SUP	OTH
00A	2-7-11	MAV	KRKE	RELEASED TO PRODUCTION	09V098PT			

MODEL FILENAME: 09V098PT/00.PRT
CAD FILENAME/LAYERS: 09V098PT_DC/00A.PRT

PANDUIT CORP TINLEY PARK, ILLINOIS

VERTICAL, MIXED (24) C-13 & (6) C-19 NETWORKED & ENVIRONMENTAL MONITORED (EXPANDED) POWER OUTLET UNIT (QM0A1C0BA30P1) CUSTOMER DRAWING

UNLESS OTHERWISE SPECIFIED, DIMENSIONAL TOLERANCES ARE:

INCHES		[METRIC - MILLIMETER]		ANGLE
X.X	+/- 0.03	X.	+/- 0.8	+/- 1°
X.XX	+/- 0.015	X.X	+/- 0.4	
X.XXX	+/- 0.005	X.XX	+/- 0.13	

UNLESS OTHERWISE SPECIFIED, ALL DIMENSIONS ARE GIVEN IN INCHES, THIRD ANGLE PROJECTION

DRAWN BY: MAV
DATE: 2-7-11
CHK'D: KRKE
MAT'L:
SCALE: NONE
DRAWING NO.: 09V098PT
DWG SIZE: B