EM-121023-341

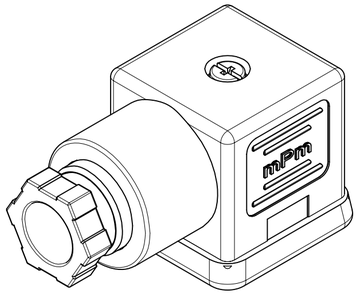

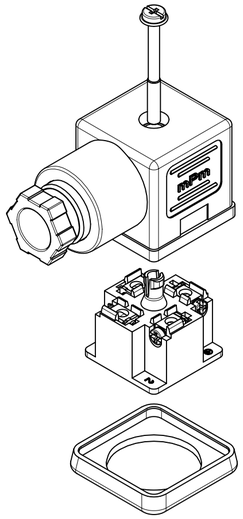

ITEM	DESCRIPTION
1	SCREW
2	COVER ASSEMBLY
3	INSERT ASSEMBLY
4	GASKET

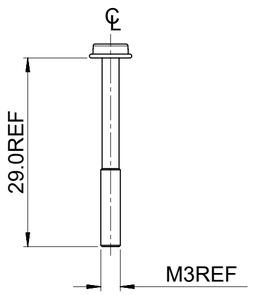

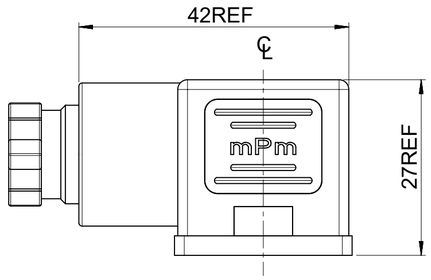

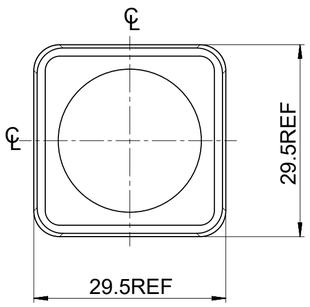

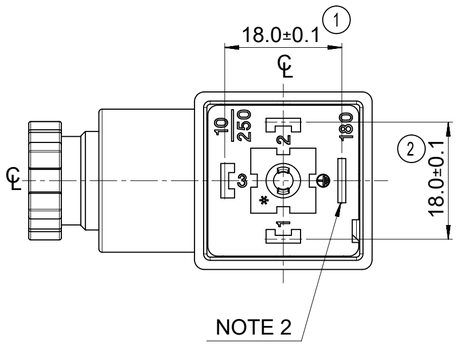

C18 2 09 N 21 **

SERIES
C18= INTERNAL THREAD FORM A

POLES
2= 2 POLE & 3= 3 POLE

THREAD SIZE
09= PG9, 11= PG11, M6= M16x1.5, M0= M20x1.5, 12= 1/2" GAS, 13= 1/2" NPTF
39= PG9 W/STRAIN RELIEF, 41= PG11 W/STRAIN RELIEF

MATERIAL AND HOUSING COLOUR
G = PA6 GRAY, H= PA6 HEAT PROTECTION,
N= PA6 BLACK, W= PA66 BLACK V0, T= TRANSPARENT

GROUND POSITION
0= UNMOUNTED, 2= H12, 3= H3, 6= H6 & 9= H9

SCREW AND GASKET
1= NBR PROFILE GASKET & SCREW
2= NBR FLAT GASKET & SCREW
3= WHITE SILICONE PROFILE GASKET & SCREW
4= WHITE SILICONE FLAT GASKET & SCREW
5= NBR PROFILE GASKET, NO SCREW
9= NO GASKET, NO SCREW
0= NO GASKET, NO SCREW
A= NBR PROFILE GASKET & SCREW +2mm
B= NBR FLAT GASKET & SCREW +2mm
C= WHITE SILICONE PROFILE GASKET & SCREW +2mm
G= NO GASKET & STANDARD SCREW
I= BULK PACK FULLY MOUNTED, NO GASKET
P= INTEGRATED NBR GASKET & IP67 SCREW ASSEMBLED
R= INTEGRATED NBR GASKET & IP67 SCREW NOT ASSEMBLED

NON STANDARD COMPONENTS
14= SINGLE BAG
19= PIN NO.3 NON CONNECTED/REMOVED,
23= ASSEMBLED SCREWS & GASKET
1O= SPECIAL GROMMET
4S= SPECIAL GROMMET
5A= SINGLE BAGGED 500 IN A BOX
9V= NO SCREW OR GASKET
AF= CENTRE SCREW MOUNTED
BM= GOLD TERMINALS
BS= FULLY UNMOUNTED ALL COMPONENTS IN SEPARATE BAGS
OH= INOX SCREW
P7= IP67 COMPLIANT
SA= UL LISTED PART

NOTES
1. PLEASE SEE SHEET 2 FOR CURRENTLY CONFIGURED PART NUMBERS, FOR SPECIFIC PART NUMBERS PLEASE CONTACT SALES OR CONSULT THE INTELLIGENT PART NUMBERS IN THE TABLE ATTACHED
2. EARTH POSITION SHOWN, H12.
3. FOR PACKAGING SEE PACKAGING SPEC PK-121023-C18
4. PRODUCT SPEC: SEE PS-121201-001

LAST INSPECTION NUMBER 2

THIS DRAWING CONTAINS INFORMATION THAT IS PROPRIETARY TO MOLEX ELECTRONIC TECHNOLOGIES, LLC AND SHOULD NOT BE USED WITHOUT WRITTEN PERMISSION

FUNCTIONAL SYMBOLS
EA = 0
EC = 0
EP = 0
DIVISIONAL SYMBOLS

DIMENSION UNITS: mm
SCALE: 1.5:1

GENERAL TOLERANCES (UNLESS SPECIFIED)

	MM	INCH
4 PLACES	±	±
3 PLACES	±	±
2 PLACES	± 0.1	±
1 PLACE	± 0.2	±
0 PLACES	±	±
ANGULAR TOL	± °	

DRAFT WHERE APPLICABLE MUST REMAIN WITHIN DIMENSIONS

CURRENT REV DESC: REMOVED OBSOLETED PART NUMBERS AS PER PCN#513405

EC NO: 784316
DRWN: VISHAH2 2024/04/19
CHK'D: GGA 2024/05/13
APPR: GGA 2024/05/13

INITIAL REVISION:
DRWN: JOCONNOR 2011/05/04
APPR: EFOLAN 2011/05/24

THIRD ANGLE PROJECTION
DRAWING: A2-SIZE
SERIES: 121023

molex

C18 SERIES
INTERNAL THREAD

PRODUCT CUSTOMER DRAWING

DOCUMENT NUMBER	DOC TYPE	DOC PART	REVISION
SD-121023-001	PSD	001	P4

MATERIAL NUMBER	CUSTOMER	SHEET NUMBER
SEE TABLE	GENERAL MARKET	1 OF 2

DOCUMENT STATUS	P1	RELEASE DATE	2024/05/13 16:22:04

FORMAT: Mel-lega-master-lib-prod-A2
REVISION: E1
DATE: 2021/05/01

PART No.	mPm PART No.	DESCRIPTION
1210230229	C18209G21	TYPE A 2P PG9 GRAY, NBR PROFILE GASKET & SCREW
1210230231	C18209G22	TYPE A 2P PG9 GRAY, NBR FLAT GASKET & SCREW
1210230238	C18209N21	TYPE A 2P PG9 BLACK, NBR PROFILE GASKET & SCREW
1210230242	C18209N22	TYPE A 2P PG9 BLACK, NBR FLAT GASKET & SCREW
1210230244	C18209N23	TYPE A 2P PG9 BLACK, WHITE SILICONE PROFILE GASKET & SCREW
1210230245	C18209N24	TYPE A 2P PG9 BLACK, WHITE SILICONE FLAT GASKET & SCREW
1210230246	C18209N25	TYPE A 2P PG9 BLACK, NBR PROFILE GASKET, NO SCREW
1210230249	C18209N2A	TYPE A 2P PG9 BLACK, NBR PROFILE GASKET & SCREW +2mm
1210230251	C18209N31	TYPE A 2P PG9 BLACK, NBR PROFILE GASKET & SCREW
1210230252	C18209N61	TYPE A 2P PG9 BLACK, NBR PROFILE GASKET & SCREW
1210230253	C18209N62	TYPE A 2P PG9 BLACK, NBR FLAT GASKET & SCREW
1210230254	C18209T21	TYPE A 2P PG9 TRANSPARENT, NBR PROFILE GASKET & SCREW
1210230271	C18211G21	TYPE A 2P PG11 GRAY, NBR PROFILE GASKET & SCREW
1210230278	C18211N21	TYPE A 2P PG11 BLACK, NBR PROFILE GASKET & SCREW
1210230282	C18211N23	TYPE A 2P PG11 BLACK, WHITE SILICONE PROFILE GASKET & SCREW
1210230283	C18211N24	TYPE A 2P PG11 BLACK, WHITE SILICONE FLAT GASKET & SCREW
1210230284	C18211N61	TYPE A 2P PG11 BLACK, NBR PROFILE GASKET & SCREW
1210230286	C18211T21	TYPE A 2P PG11 TRANSPARENT, NBR PROFILE GASKET & SCREW
1210230319	C18213N21	TYPE A 2P 1/2” NPTF BLACK, NBR PROFILE GASKET & SCREW
1210230328	C18239G21	TYPE A 2P PG9 W/STRAIN RELIEF GRAY, NBR PROFILE GASKET & SCREW
1210230331	C18241N21	TYPE A 2P PG11 W/STRAIN RELIEF BLACK, NBR PROFILE GASKET & SCREW
1210230336	C18309G21	TYPE A 3P PG9 GRAY, NBR PROFILE GASKET & SCREW
1210230337	C18309G22	TYPE A 3P PG9 GRAY, NBR FLAT GASKET & SCREW
1210230341	C18309N21	TYPE A 3P PG9 BLACK, NBR PROFILE GASKET & SCREW
1210230345	C18309N23	TYPE A 3P PG9 BLACK, WHITE SILICONE PROFILE GASKET & SCREW
1210230346	C18309N24	TYPE A 3P PG9 BLACK, WHITE SILICONE FLAT GASKET & SCREW
1210230352	C18309N2G	TYPE A 3P PG9 BLACK, NO GASKET, & STANDARD SCREW
1210230358	C18309T21	TYPE A 3P PG9 TRANSPARENT, NBR PROFILE GASKET & SCREW
1210230364	C18309W21	TYPE A 3P PG9 BLACK V0, NBR PROFILE GASKET & SCREW
1210230367	C18309W23	TYPE A 3P PG9 BLACK V0, WHITE SILICONE PROFILE GASKET & SCREW
1210230372	C18311G21	TYPE A 3P PG11 GRAY, NBR PROFILE GASKET & SCREW
1210230373	C18311G22	TYPE A 3P PG11 GRAY, NBR FLAT GASKET & SCREW
1210230374	C18311G61	TYPE A 3P PG11 GRAY, NBR PROFILE GASKET & SCREW
1210230377	C18311N21	TYPE A 3P PG11 BLACK, NBR PROFILE GASKET & SCREW
1210230378	C18311N22	TYPE A 3P PG11 BLACK, NBR FLAT GASKET & SCREW
1210230379	C18311N31	TYPE A 3P PG11 BLACK, NBR PROFILE GASKET & SCREW
1210230382	C18311N61	TYPE A 3P PG11 BLACK, NBR PROFILE GASKET & SCREW
1210230384	C18311T21	TYPE A 3P PG11 TRANSPARENT, NBR PROFILE GASKET & SCREW
1210230401	C18312N22	TYPE A 3P 1/2" GAS BLACK, NBR FLAT GASKET & SCREW
1210230414	C18313N21	TYPE A 3P 1/2" NPTF BLACK, NBR PROFILE GASKET & SCREW
1210230415	C18313N22	TYPE A 3P 1/2" NPTF BLACK, NBR FLAT GASKET & SCREW
1210230421	C18339N23	TYPE A 3P PG9 W/STRAIN RELIEF BLACK, WHITE SILICONE PROFILE GASKET & SCREW
1210230422	C18339N2C	TYPE A 3P PG9 W/STRAIN RELIEF BLACK, WHITE SILICONE PROFILE GASKET, & SCREW +2mm
1210230645	C183M6N21	TYPE A 3P M16x1.5 BLACK, NBR PROFILE GASKET & SCREW
1210230656	C183M6G21	TYPE A 3P M16x1.5 GRAY, NBR PROFILE GASKET & SCREW
1210230660	C183M0N21	TYPE A 3P M20x1.5 BLACK, NBR PROFILE GASKET & SCREW
1210230662	C182M0N21	TYPE A 2P M20x1.5 BLACK, NBR PROFILE GASKET & SCREW
1210230677	C182M6N21	TYPE A 2P M16x1.5 BLACK, NBR PROFILE GASKET & SCREW
1210230704	C182M6N22	TYPE A 2P M16x1.5 BLACK, NBR FLAT GASKET & SCREW
1210230718	C182M6G21	TYPE A 2P M16x1.5 GRAY, NBR PROFILE GASKET & SCREW
1210230741	C183M0N2G	TYPE A 3P M20x1.5 BLACK, NO GASKET, & STANDARD SCREW
1210230763	C18311W2G	TYPE A 3P PG11 BLACK V0, NO GASKET, & STANDARD SCREW
1210230780	C18312N23	TYPE A 3P 1/2" GAS BLACK, WHITE SILICONE PROFILE GASKET & SCREW
1210230793	C18309N2A	TYPE A 3P PG9 BLACK, NBR PROFILE GASKET & SCREW +2mm

PART No.	mPm PART No.	DESCRIPTION
1210230800	C18209G2B	TYPE A 2P PG9 GRAY, NBR FLAT GASKET, & SCREW +2mm
1210230803	C182M0N2A	TYPE A 2P M20x1.5 BLACK, NBR PROFILE GASKET & SCREW +2mm
1210230807	C18309N2R	TYPE A 3P PG9 BLACK, INTEGRATED NBR GASKET & IP67 SCREW NOT ASSEMBLED
1210230825	C182M6N2P	TYPE A 2P M16x1.5 BLACK, INTEGRATED NBR GASKET & IP67 SCREW ASSEMBLED
1210230833	C18211G2A	TYPE A 2P PG11 GRAY, NBR PROFILE GASKET & SCREW +2mm
1210240268	C18311N2G	TYPE A 3P PG11 BLACK, NO GASKET, & STANDARD SCREW
1210240370	C18211N2A	TYPE A 2P PG11 BLACK, NBR PROFILE GASKET & SCREW +2mm
1210240940	C18209N20	TYPE A 2P PG9 BLACK, NO GASKET, NO SCREW
1210240133	C18209N210H	TYPE A 2P PG9 BLACK, NBR PROFILE GASKET, STAINLESS STEEL SCREW
1210240154	C18209N220H	TYPE A 2P PG9 BLACK, NBR FLAT GASKET, STAINLESS STEEL SCREW
1210240378	C18311N210H	TYPE A 3P PG11 BLACK, NBR PROFILE GASKET, STAINLESS STEEL SCREW
1210240139	C18209N2114	TYPE A 2P PG9 BLACK, NBR PROFILE GASKET & SCREW IN NEUTRAL BAG
1210240156	C18209N2214	TYPE A 2P PG9 BLACK, NBR FLAT GASKET & SCREW IN NEUTRAL BAG
1210240224	C18309N2114	TYPE A 3P PG9 BLACK, NBR PROFILE GASKET & SCREW IN NEUTRAL BAG
1210240755	C18309N2R19	TYPE A 3P PG9 BLACK, INTEGRATED NBR GASKET & IP67 SCREW NOT ASSEMBLED W/O PIN No. 3
1210240227	C18309N211O	TYPE A 3P PG9 BLACK, NBR PROFILE GASKET & SCREW, WITH SPECIAL GROMMET
1210240185	C18211G2123	TYPE A 2P PG11 GRAY, NBR PROFILE GASKET & SCREW, FULLY MOUNTED
1210240271	C18311N614S	TYPE A 3P PG11 BLACK, NBR PROFILE GASKET & SCREW, WITH SPECIAL GROMMET
1210240265	C18311N215A	TYPE A 3P PG11 BLACK, NBR PROFILE GASKET & SCREW, SINGLE BAGGED, 500 IN A BOX
1210230350	C18309N299V	TYPE A 3P PG9 BLACK, NO GASKET, NO SCREW
1210240167	C18209N299V	TYPE A 2P PG9 BLACK, NO GASKET, NO SCREW
1210230232	C18209G22AF	TYPE A 2P PG9 GRAY, NBR FLAT GASKET WITH SCREW MOUNTED
1210230243	C18209N22AF	TYPE A 2P PG9 BLACK, NBR FLAT GASKET WITH SCREW MOUNTED
1210230274	C18211G22AF	TYPE A 2P PG11 GRAY, NBR FLAT GASKET WITH SCREW MOUNTED
1210230281	C18211N22AF	TYPE A 2P PG11 BLACK, NBR FLAT GASKET WITH SCREW MOUNTED
1210230648	C18309N31AF	TYPE A 3P PG9 BLACK, NBR PROFILE GASKET WITH SCREW MOUNTED
1210230696	C183M6N21AF	TYPE A 3P M16x1.5 BLACK, NBR PROFILE GASKET WITH SCREW MOUNTED
1210230801	C183M6N22AF	TYPE A 3P M16x1.5 BLACK, NBR FLAT GASKET WITH SCREW MOUNTED
1210230728	C18209N21BS	TYPE A 2P PG9 BLACK, NBR PROFILE GASKET & SCREW, FULLY UNMOUNTED
1210230240	C18209N21P7	TYPE A 2P PG9 BLACK, NBR PROFILE GASKET & SCREW, IP67 COMPLIANT
1210230272	C18211G21P7	TYPE A 2P PG11 GRAY, NBR PROFILE GASKET IP67 COMPLIANT
1210230279	C18211N21P7	TYPE A 2P PG11 BLACK, NBR PROFILE GASKET & SCREW, IP67 COMPLIANT
1210230725	C18309N21P7	TYPE A 3P PG9 BLACK, NBR PROFILE GASKET & SCREW, IP67 COMPLIANT
1210230732	C18209G21P7	TYPE A 2P PG9 GRAY, NBR PROFILE GASKET & SCREW IP67 COMPLIANT
1210230843	C183M6N21P7	TYPE A 3P M16x1.5 BLACK, NBR PROFILE GASKET & SCREW IP67 COMPLIANT
1210230849	C18309N2I	TYPE A 3P PG9 BLACK, BULK PACK FULLY MOUNTED, NO GASKET
1210230739	C18311W21SA	TYPE A 3P PG11 BLACK V0, NBR PROFILE GASKET & SCREW, UL LISTED
1210230851	C182M6W21SA	TYPE A 2P M16x1.5 BLACK V0, NBR PROFILE GASKET UL LISTED
1210230853	C18311N21P7	TYPE A 3P PG11 BLACK, NBR PROFILE GASKET & SCREW, IP67 COMPLIANT
1210230854	C18309W2PSA14	TYPE A 3P PG9 BLACK V0, NBR PROFILE GASKET & SCREW, UL LISTED, IP67 COMPLIANT, SINGLE BAGGED
1210230855	C183M0W31AFSA	TYPE A 3P M20x1.5 BLACK V0, NBR PROFILE GASKET WITH SCREW MOUNTED, UL LISTED
1210230657	C18309W21SA	TYPE A 3P PG9 BLACK V0, NBR PROFILE GASKET & SCREW, UL LISTED
1210230809	C18211W21SA	TYPE A 2P PG11 BLACK V0, NBR PROFILE GASKET & SCREW, UL LISTED
1210230861	C18211W23SA	TYPE A 2P PG11 BLACK V0, WHITE SILICONE PROFILE GASKET & SCREW, UL LISTED
1210230344	C18309N22	TYPE A 3P PG9 BLACK PA6, H12, NBR FLAT GASKET & SCREW
1210230862	C18313T22	TYPE A 3P 1/2" NPTF TRANSPARENT, NBR FLAT GASKET & SCREW
1210230674	C18209W21SA	TYPE A 2P PG9 BLACK, NBR PROFILE GASKET & SCREW, UL LISTED

THIS DRAWING CONTAINS INFORMATION THAT IS PROPRIETARY TO MOLEX ELECTRONIC TECHNOLOGIES, LLC AND SHOULD NOT BE USED WITHOUT WRITTEN PERMISSION

DIMENSION UNITS	SCALE
mm	2:1

GENERAL TOLERANCES (UNLESS SPECIFIED)

	MM	INCH
4 PLACES	±	±
3 PLACES	±	±
2 PLACES	± 0.1	±
1 PLACE	± 0.2	±
0 PLACES	±	±
ANGULAR TOL	± °	

DRAFT WHERE APPLICABLE MUST REMAIN WITHIN DIMENSIONS

CURRENT REV DESC: REMOVED OBSOLETED PART NUMBERS AS PER PCN#513405

EC NO: 784316
DRWN: VISHAH2 2024/04/19
CHK'D: GGA 2024/05/13
APPR: GGA 2024/05/13

INITIAL REVISION:
DRWN: JOCONNOR 2011/05/04
APPR: EFOLAN 2011/05/24

THIRD ANGLE PROJECTION | DRAWING: A2-SIZE | SERIES: 121023

molex

C18 SERIES
INTERNAL THREAD

PRODUCT CUSTOMER DRAWING

DOCUMENT NUMBER	DOC TYPE	DOC PART	REVISION
SD-121023-001	PSD	001	P4

MATERIAL NUMBER	CUSTOMER	SHEET NUMBER
SEE TABLE	GENERAL MARKET	2 OF 2

DOCUMENT STATUS	P1	RELEASE DATE	2024/05/13 16:22:04

FORMAT: Mat-tega-master-tb-prod-A2
REVISION: E1
DATE: 2021/05/01