B243000N2

SERIES
B24= FORM A
POLES
2= 2 POLE & 3= 3 POLE
CURVED BASE DIAMETER
000= FLAT
MATERIAL AND HOUSING COLOUR
N= PA6 BLACK, G= PA6 GRAY

SCREW AND GASKET
2= NBR FLAT GASKET & SCREWS
6= NBR FLAT GASKET & NO SCREWS
0= NO SCREWS OR GASKET

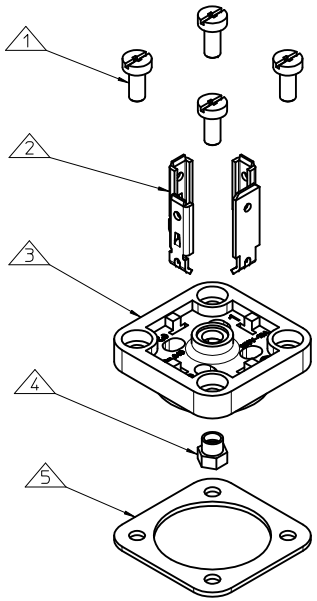

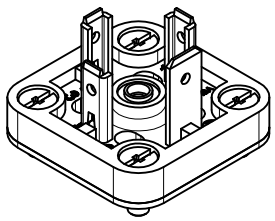

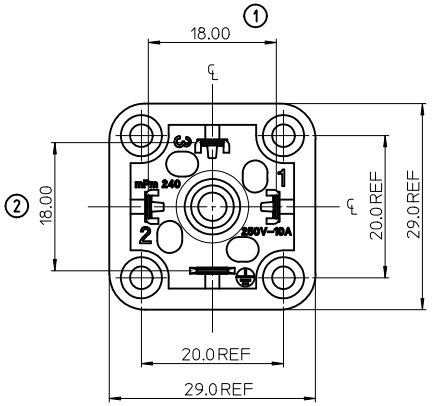

NOTES
1. PLEASE SEE TABLE FOR CURRENTLY CONFIGURED PART NUMBERS. FOR SPECIFIC PART NUMBERS PLEASE CONTACT SALES OR CONSULT THE INTELLIGENT PART NUMBERS IN THE TABLE ATTACHED.
2. FOR PACKAGING SEE PACKAGING SPEC PK-121012-B24
3. PRODUCT SPEC: SEE PS-121201-001

LAST INSPECTION NUMBER 4

PART NO	MPM NO	DESCRIPTION	TERMINAL BEND ANGLE
1210120068	B243000N0	TYPE A 3P BLACK, NO GASKET, NO SCREW	45
1210120166	B242000N6	TYPE A 2P BLACK, NBR FLAT GASKET & NO FIXING SCREWS	45
1210120167	B243000G6	TYPE A 3P GRAY, NBR FLAT GASKET & NO FIXING SCREWS	45
1210120069	B243000N2	TYPE A 3P BLACK, NBR FLAT GASKET & SCREWS	45
1210120067	B243000G2	TYPE A 3P GRAY, NBR FLAT GASKET & SCREWS	45
1210120066	B242000N2	TYPE A 2P BLACK, NBR FLAT GASKET & SCREWS	45

ITEM	DESCRIPTION
1	SCREWS
2	TERMINALS
3	HOUSING
4	SCREW INSERT
5	GASKET

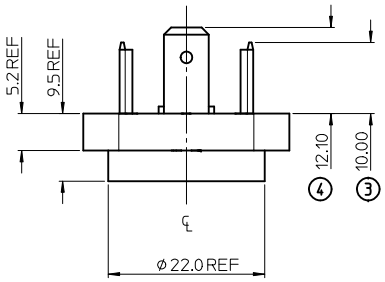

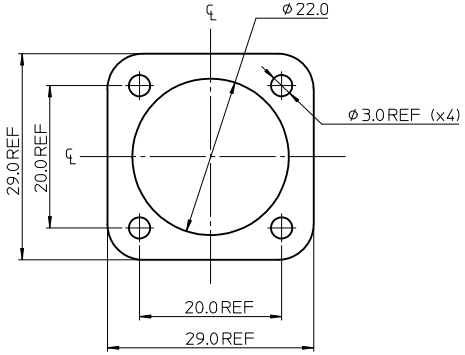

FLAT GASKET

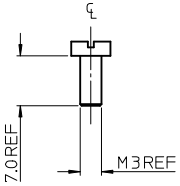

7mm M3 SCREW

ORIGINAL RELEASE
EC NO: WEU2011-0648
DRWN:DSHEA 2011/06/23
CHKD:DMAHER 2011/06/23
APPR:EFOLAN 2011/07/06
DESCRIPTION
REV A

QUALITY SYMBOLS
▼=0
▽=0

GENERAL TOLERANCES (UNLESS SPECIFIED)

	mm	INCH
4 PLACES	± ---	± ---
3 PLACES	± ---	± ---
2 PLACES	± 0.1	± ---
1 PLACE	± 0.2	± ---
ANGULAR ±---°		

DRAFT WHERE APPLICABLE MUST REMAIN WITHIN DIMENSIONS

DIMENSION STYLE: MM ONLY
SCALE: 2:1
DESIGN UNITS: METRIC
THIRD ANGLE PROJECTION

DRAWN BY: DSHEA DATE: 2011/06/23
CHECKED BY: DMAHER DATE: 2011/06/23
APPROVED BY: EFOLAN DATE: 2011/07/06
MATERIAL NO.: SEE TABLE

TITLE: B24 SERIES BASE

molex MOLEX INCORPORATED

DOCUMENT NO.: SD-121012-006
SHEET NO.: 1 OF 1

SIZE: A2

THIS DRAWING CONTAINS INFORMATION THAT IS PROPRIETARY TO MOLEX INCORPORATED AND SHOULD NOT BE USED WITHOUT WRITTEN PERMISSION

tb_frame_A2_P_AM_T
Rev. E 2006/04/15