LEOPARD IMAGING INC

LI-CAM-IMX224-MIPI Data Sheet

Features

- Diagonal 6.09mm (Type 1/3) CMOS Solid-state image sensor
- Number of recommended recording pixels: 1280 H x 960 V
- Pixel size: 3.75µm x 3.75µm
- MIPI interface
- Maximum frame rate in Quad VGA mode: 120 frame / s
- Wide dynamic range (WDR)
  Multiple exposure WDR
  Digital overlap WDR
- Variable-speed shutter function
- 10-bit / 12-bit A/D converter
- Conversion gain switching (HCG Mode / LCG Mode)
- CDS /PGA function
- Direct interface to TI DM385 IPNC

Application

- Digital video camera development
- High resolution surveillance IP netowrk camera
- High resolution video conference camera

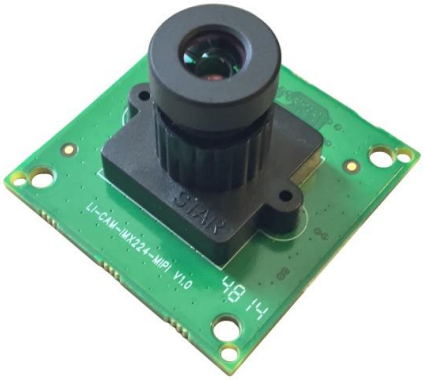

Default Lens Specification

- Model: 6016-650-54
- Image format: 1/3”
- Focal length: 6.0 mm
- Aperture, F/#: 1.6
- Back focal length: 8.3 mm
- Flange back length: 8.12 mm
- Built in IR cut filter
- FOV (D): 54 °
- Thread size: M12 x 0.5P

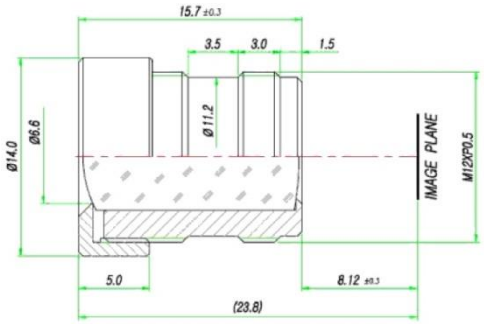

Leopard Imaging Inc.

1130 Cadillac Ct., Milpitas, CA 95035,USA
Phone: +1-408-263-0988
Fax: +1-408-217-1960
Email:sales@leopardimaging.com
Website: www.leopardimaging.com
www.leopard-security.com