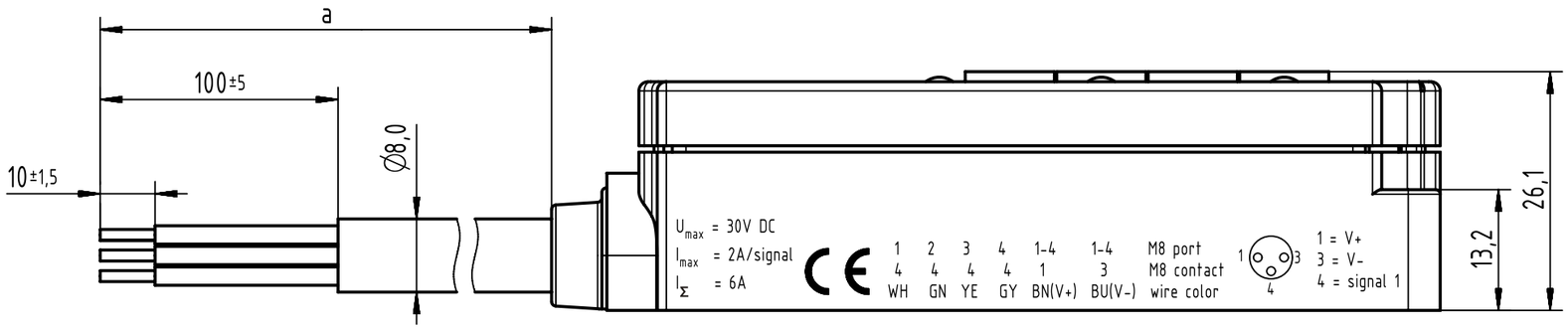

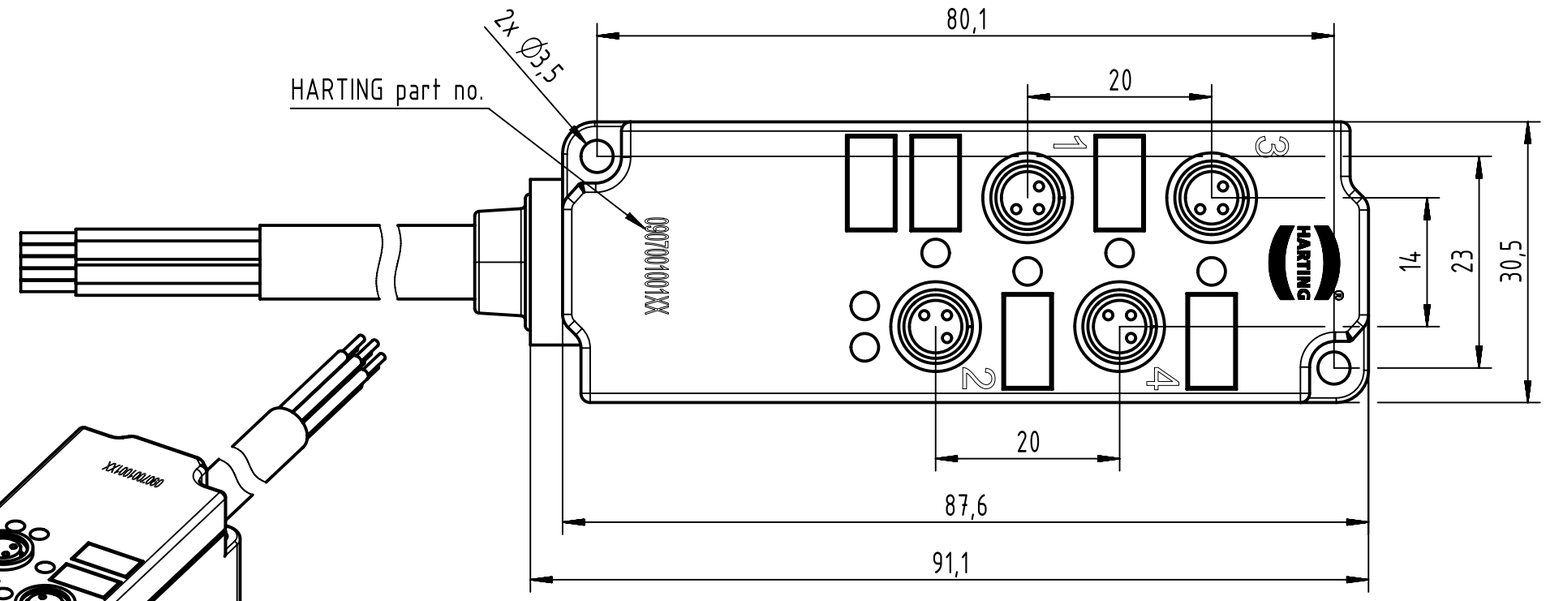

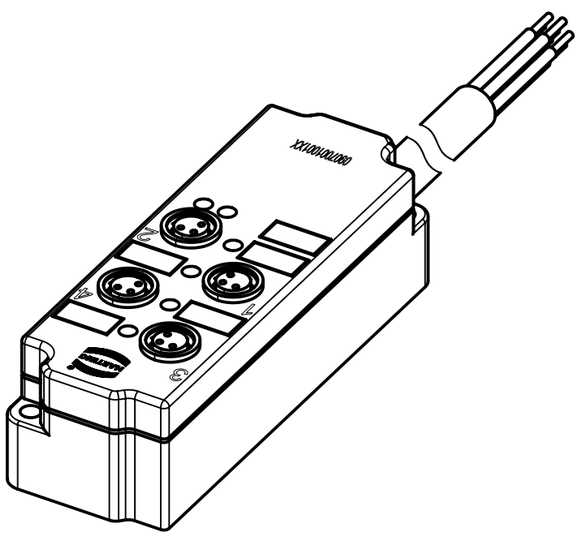

Loading plan

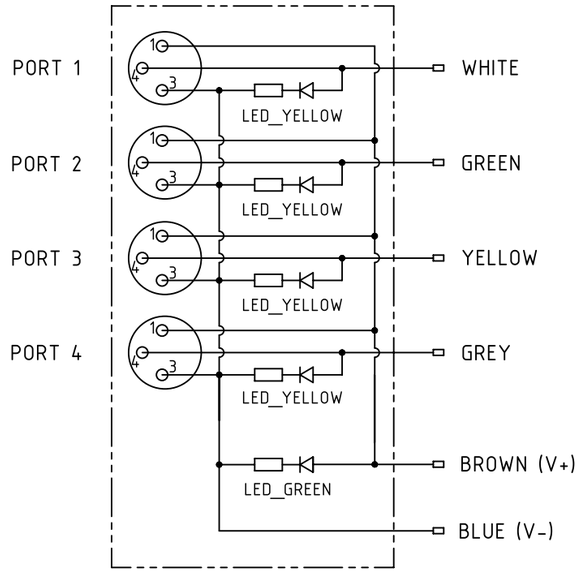

- Protection level: IP67
- Temperature range: -25°C ... +85°C

Electrical data:
-Rated voltage: 15-30V DC
-Nominal: 2 A per Contact
-Current: 6 A max total

Cont. no	HARTING part no.	Type of cable	Dim. a[m]
6	090700100150	PVC, 2x AWG 20 + 8x AWG 24, black	10
5	090700100151		5
4	090700100153		2
3	090700100100	PUR, 2x AWG 20 + 8x AWG 24, black	10
2	090700100101		5
1	090700100103		2

All Dimensions in mm | Tech. Character. | Free size tol. | According to production drawing

All rights reserved

Department HCS - RO

HARTING Customised Solutions
D-32339 Espelkamp

Created by	Inspected by	Standardisation	Date	State
COSTEA Costea	402676 Gross	MUNTEANV Muntean	2020-03-19	Final Release

Title: har-SAB M8/4/3p PAC

Doc-Key / ECM-Nr.: 100689666/UGD/000/E 500000169387

Type: TB | Number: 0907001001XX | Rev.: E | Page: 1/1

A3