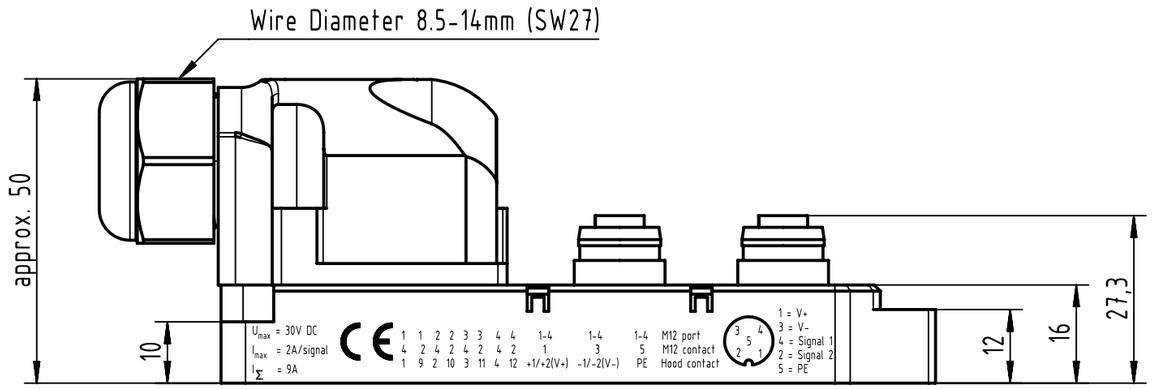

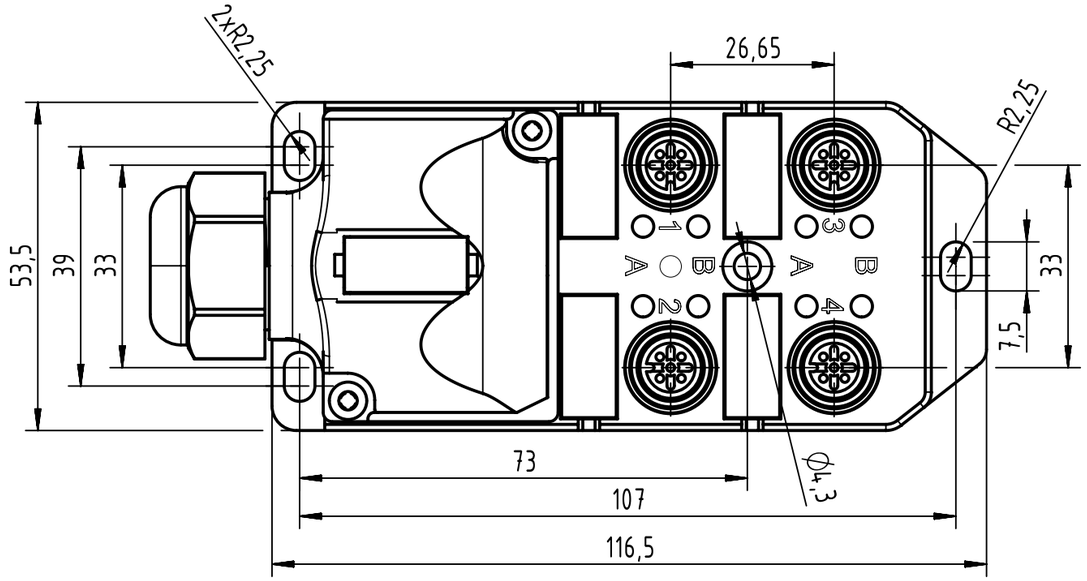

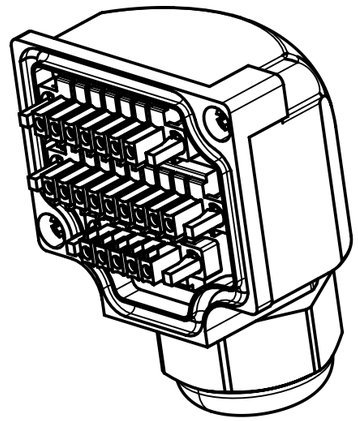

Loading plan

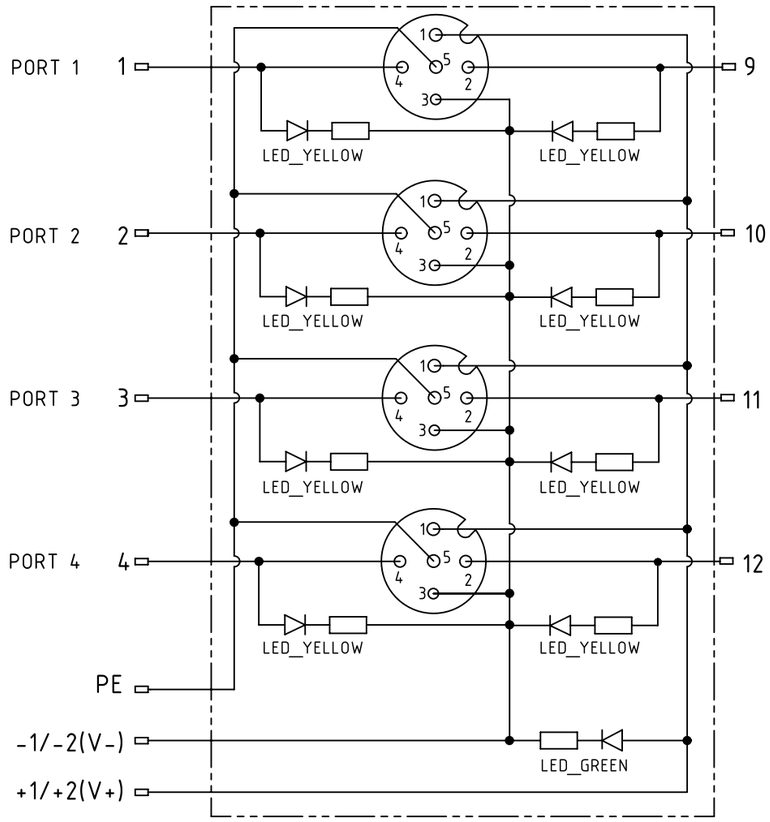

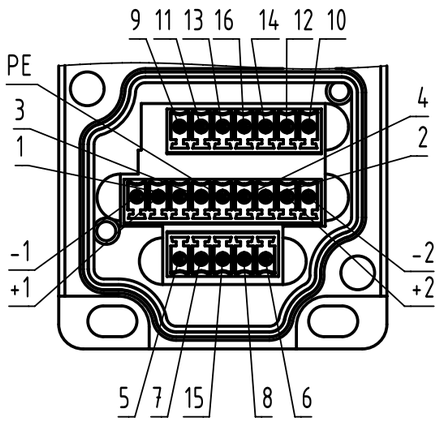

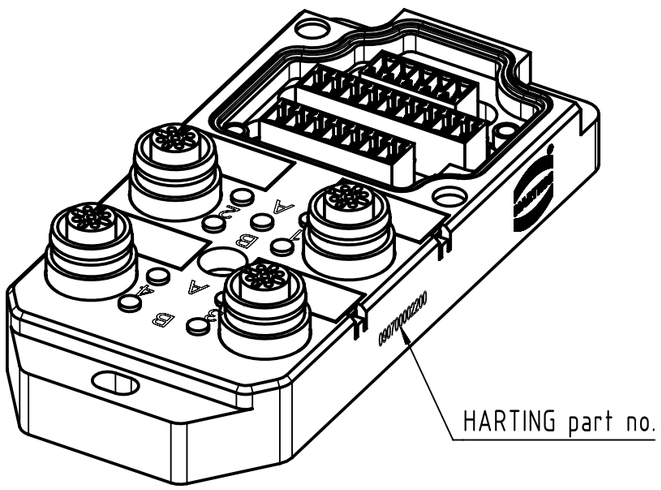

- Protection level: IP67
- Temperature range: -25°C ... +85°C

All Dimensions in mm	Tech. Character.	Free size tol.			According to production drawing
All rights reserved	Created by COSTEA Costea	Inspected by COSTEA Costea	Standardisation 402676 Gross	Date 2021-09-01	State Final Release
Department HCS - RO	Title har-SAB M12/4/5p PC				Doc-Key / ECM-Nr. 100734897/UGD/001/B 500000201941
HARTING Customised Solutions D-32339 Espelkamp	Type TB	Number 090700002200		Rev. B	Page 1/1

A3