Specifications are subject to change. Please refer to the current datasheet on www.grayhill.com for the most current published specifications for this product.

SERIES 71
Binary Code

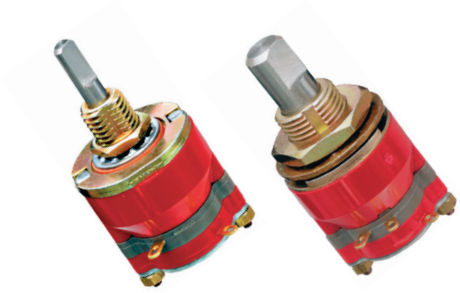

FEATURES
- 1/4" or 1/8" Shaft Diameters
- 25,000 Cycles at 125 mA
- Optional Seal Versions
- Adjustable Stop Versions

DIMENSIONS in inches (and millimeters)

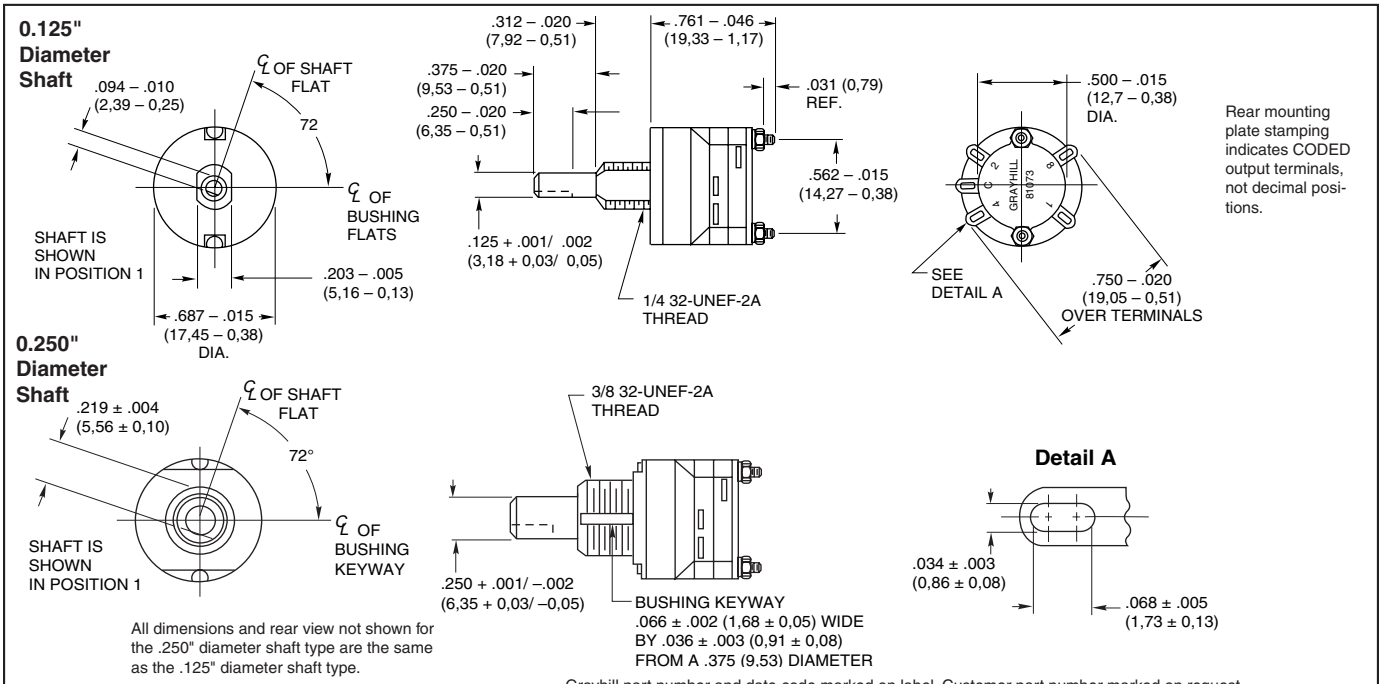

CODE AND TRUTH TABLE

Output Terminal	Decimal Position 0	1	2	3	4	5	6	7	8	9
1		●		●		●		●		●
2			●	●			●	●		
4					●	●	●	●		
8									●	●

● Indicates contact is made to the common.

SPECIFICATIONS
Electrical Rating
Rated: To make and break 125 mA at 30 Vdc resistive at standard conditions
Life Expectancy: 25,000 cycles at rated load; 50,000 cycles mechanical. For ratings at different loads and conditions, contact Grayhill.
Contact Resistance: 100 milliohms maximum (50 milliohms initially)
Insulation Resistance: As measured between mutually insulated parts
Initially: 50,000 megohms minimum
After Life: 10,000 megohms minimum
Voltage Breakdown: 500 Vac between mutually insulated parts
Carry Current: These switches will carry 3 amperes with a maximum contact temperature rise of 20°C.

OPTIONS
Shaft and Panel Seal
Shaft is sealed by o-ring inside the bushing; panel is sealed by o-ring at the base of the bushing. Seals do not alter dimensions as shown in the drawing when switch is mounted. Panel seal is silicone rubber. Shaft seal is an o-ring per MIL-P-5516B. Shaft and panel seal is not available on adjustable stop switch.

Adjustable Stop Switches
Adjustable stop switch lets you limit the number of positions. Remove and relocate pins in the front plate. A sticker holds the pins in place. With the exception of holes in the front plate, all dimensions, ratings, and characteristics are the same as the other Series 71 coded switches. For diagrams, see Standard Switch.

Additional Characteristics
Rotational Torque: 8 to 16 oz-in. **Contacts:** Non-shorting wiping contacts **Shaft Flat Orientation:** As shown in the drawing, switch would provide a decimal 1 output.

Operating Temperature Range: -40 °C to +85 °C

Materials and Finishes
Base: Diallyl per MIL-M-14
Rotor Mounting Plate: Thermoplastic. **Rotor Contact:** Phosphor Bronze, gold-plated 30 microinches minimum
Terminals: Brass, gold plate (20 microinches min) over silver plate (300 microinches min) **Additional Materials:** Other switch materials and finishes are the same as listed for the standard switch.

ORDERING INFORMATION

Shaft Diameter And Description	Part Number
1/8" Continuous Rotation	**71AY23401**
1/8" Cont. Rot., Sealed	**71AY23402**
1/4" Continuous Rotation	**71BY23403**
1/4" Cont. Rot., Sealed	**71BY23404**
1/8" Adjustable Stops	**71AD36-3118**
1/4" Adjustable Stops	**71BD36-3119**

Available from your local Grayhill Distributor.
For prices and discounts, contact a local Sales Office, an authorized local Distributor or Grayhill.