In Addition to GlobTek Inc.'s renewed ISO9001:2015 - Quality Management System Certification, GlobTek Inc. is now certified to:

ISO13485:2016 - Medical Devices Quality Management System Certification
ISO14001:2015 - Environmental Management System Certification

ISO Certificates are available online at https://www.globtek.com/iso-certificates/

The acceptance of this specification and use of the product described in this document indicates the acceptance and binding of the customer to Globtek TERMS AND CONDITIONS (attached to the end of this document), which supersede all other agreements, terms, and conditions (https://www.globtek.com/terms-and-conditions/).

The purchaser of this product (Customer) agrees that it is their sole responsibility to determine suitability/fitness of the product described in this specification for their application and to take precautions for protection against any hazards attendant to the handling and use of the product.

Footnote:

GlobTek Inc. will not be liable for the safety and performance of these power supplies/battery packs if unauthorized access and repair occurs. End user should consult applicable UL, CSA or EN standards for proper installation instruction.

Limitation of Use:

GlobTek products are intended for use with commercial, medical, and/or industrial equipment only. GlobTek product are not authorized for use as mission critical components in life support hazardous environment, nuclear or aircraft applications without prior written approval from the CEO of GlobTek Inc.
Contents of this document are subject to change without prior notice.

Customer Approval of Specification:

Please approve, sign and send back to GlobTek so we can complete order processing.
A delay in receipt of this form will delay delivery schedule.

Company Name:	Customer P/N:
Quote Number:	Date:
Authorized Representative Name:	Authorized Representative Signature:

PROPRIETARY INFORMATION
PROPRIETARY OF GLOBTEK, INC. ANY REPRODUCTION, DISCLOSURE OR USE OF THIS DRAWING, IN WHOLE OR IN PART, IS HEREBY PROHIBITED EXCEPT AS SPECIFIED IN WRITING BY GLOBTEK, INC. © GlobTek, Inc. 2018 - 2025
guest / 05/14/2025 11:48:39 AM GMT CLONED FROM TR9WG1200T00-IMR6B

REVISION HISTORY

REV	DESCRIPTION	SUB	DATE	APPROVED
A	Initial release	QA	12/27/2018	QA

POWER SUPPLY INFORMATION

TYPE	Desktop/External
TECHNOLOGY	Regulated Switchmode AC-DC Power Supply AC Adaptor
CASE COLOR	GlobTek Black
NAMEPLATE RATED INPUT	100-240V~, 50-60 Hz, 0.6 A
INPUT CONFIG	IEC 60320/C18
WATTS	18.00
VOLTS OUT	19.0
CURRENT OUT (Amps)	0.94
BLADE/CORD INCLUDED	None (Order Separately)
BLADE/CORD INSTALLED	None (Order Separately)
INGRESS PROTECTION	IP42
GROUNDING CONFIGURATION	(F1) Floating output, Class II / double insulated
EFFICIENCY LEVEL	USA DOE Level VI / Eco-design Directive 2009/125/EC, (EU) 2019/1782 - Europe Code of Conduct on Energy Efficiency of External Power Supplies - Version 5
OUTPUT CONFIGURATION	1500 mm, 18/2 Cond, Round Black, T-plug system (includes 5.5x2.5, 5.5x2.1, 3.5x1.3mm plugs in each kit), Ferrite: None, GlobTek Black, GT Cord # C3775
OVERMOLDED	Yes
OUTPUT CONNECTOR GENDER	not applicable
CONNECTOR PIN OUT	Polarity Configuration T00 All plugs are Medical Grade, Locking, Polarized once installed, and single use only. Product demonstration link: https://en.globtek.com/news/t00-changeable-output-plug-system-for-power-supplies MOLDED CONNECTORS AVAILABLE
LABEL SPECS	Standard GT,L-1186
SPECIAL BARCODE LABEL MATERIAL	No
PACK SPEC	Packing for DT plug model with T00 plug and manual
USER MANUAL	809-DESKTOPUSERMANUAL on A4 paper

PROPRIETARY INFORMATION
PROPRIETARY OF GLOBTEK, INC. ANY REPRODUCTION, DISCLOSURE OR USE OF THIS DRAWING, IN WHOLE OR IN PART, IS HEREBY PROHIBITED EXCEPT AS SPECIFIED IN WRITING BY GLOBTEK, INC. © GlobTek, Inc. 2018 - 2025
guest / 05/14/2025 11:48:39 AM GMT CLONED FROM TR9WG1200T00-IMR6B

Notes/Modifications/Customizations (notes in this section supersede the values shown in the standard spec)

DIMENSIONS ARE IN MM UNLESS SPECIFIED OTHERWISE

Packing bag includes three tips.

1.T-C-12-S(R)

2.T-L-12-S(R)

3.T-K-11-S(R)

PROPRIETARY INFORMATION

PROPRIETARY OF GLOBTEK, INC. ANY REPRODUCTION, DISCLOSURE OR USE OF THIS DRAWING, IN WHOLE OR IN PART, IS HEREBY PROHIBITED EXCEPT AS SPECIFIED IN WRITING BY GLOBTEK, INC. © GlobTek, Inc. 2018 - 2025

guest / 05/14/2025 11:48:39 AM GMT CLONED FROM TR9WG1200T00-IMR6B

ELECTRICAL SPECIFICATIONS

Input

Input Voltage:	Specified: 90-264VAC, Nameplate: 100-240VAC 100% rated load current for 90-264VAC 85% rated load current for 85-264VAC 100% rated load current for 110-370VDC
Input Frequency:	Specified: 47-63Hz, Nameplate: 50-60Hz
No Load Input Power:	<75mW @ 230VAC (EU CoC Tier 2 compliant)
Inrush Current:	30A/60A maximum, cold start @ 115VAC/230VAC input, respectively
Efficiency:	DoE Level VI compliant, EU CoC Tier 2 compliant

Output

Turn-on Delay:	1 second max. @ nominal line and full load
Output Regulation	± 5% max. (measured at the output connector)
Line Regulation:	± 0.5% typ. (measured at the output connector, full load)
Ripple:	1% or 100mV, whichever is greater (measured using a 47µF low-ESR cap + 0.1µF ceramic capacitor, measured @ 20MHz BW, at output connector)
Transient Response:	5% max. deviation (with 40-70% load step), 1ms typ. recovery time
Hold-up Time:	8ms typ. @ nominal line and full load
Power On Indicator:	Green LED

Protections

Input Protection:	MOV transient suppressor, input line fusing
Over-Voltage Protection:	110-130% of nominal output voltage
Short-Circuit Protection:	Auto-restart
Over-Current Protection:	110-160% of rated output current (Current limit range is determined by normal output power rating, not derated power level)

Environmental

MTBF:	1,500,000 hours @ 25°C ambient, full load (Telcordia SR-332, Issue 3)
Operating Temperature:	-20°C to 40°C (full load) See derating table for output power capability at other temperatures. Extended low temperature range available as a custom option.
Storage Temperature:	-30°C to 80°C
Humidity:	0% to 95% relative humidity, non-condensing

PROPRIETARY INFORMATION
PROPRIETARY OF GLOBTEK, INC. ANY REPRODUCTION, DISCLOSURE OR USE OF THIS DRAWING, IN WHOLE OR IN PART, IS HEREBY PROHIBITED EXCEPT AS SPECIFIED IN WRITING BY GLOBTEK, INC. © GlobTek, Inc. 2018 - 2025
guest / 05/14/2025 11:48:39 AM GMT CLONED FROM TR9WG1200T00-IMR6B

Altitude:	5000m
Ingress protection:	IP42 standard, IP52 available as a special option
Cooling:	Convection
RoHS:	Complies with EU 2011/65/EU amended by EU 2015/863 and China SJ/T 11363-2006

Safety

Dielectric Withstand Voltage:	4000VAC or 5656VDC from input to output 3000VAC or 4242VDC from input to earth (Class I models)
Touch Current:	Class I models: < 20uA Class II models: <75uA
Earth Leakage Current:	Class I models: <300uA Class II models: N/A
Isolation Options:	Floating output or Class I earthed output (desktop models)
Earth Continuity Test:	< 0.1 ohm between AC inlet earth pin and PCB termination point
Means of Protection (Primary-to-Secondary):	2 x MOPP
Compliant Standards:	See listing at the end of this document.

EMC

Applicable Standards:	Medical: EN60601-1-2, 4th edition Emissions: EN55032, EN61000-6-3, EN61000-6-4 Immunity: EN55024, EN61000-6-1, EN61000-6-2
Conducted Emissions:	Class B, FCC Part 15, Class B (with resistive load)
Radiated Emissions:	Class B, FCC Part 15, Class B (with resistive load)
Harmonic Current Voltage Distortion:	EN61000-3-2, Class A
Voltage Fluctuations/Flicker:	EN61000-3-3
Electrostatic Discharge (ESD) Immunity:	EN61000-4-2, 8KV contact discharge, 20KV air discharge
Radiated RF Immunity:	EN61000-4-3, 10V/m 80-1000MHz, 3V/m 1-2.7GHz, 80% 1KHz AM
EFT/Burst Immunity:	EN61000-4-4, 4KV/100kHz.
Line Surge Immunity:	EN61000-4-5, 2KV differential, 4KV common-mode
Conducted RF Immunity:	EN61000-4-6, 3VRMS, 80% 1KHz AM
Power Frequency Magnetic Field Immunity:	EN61000-4-8, 30A/m
Voltage Dip Immunity:	EN61000-4-11

Enclosure

Housing:	High impact plastic, 94V0 polycarbonate, non-vented
AC Input Mechanical Options:	Wall plug-in, changeable blades (Class II only) Desktop housing, extended housing: C6, C8, C14, or C18 IEC inlet (Class I or Class II)
Markings:	Label or laser printed

PROPRIETARY INFORMATION
PROPRIETARY OF GLOBTEK, INC. ANY REPRODUCTION, DISCLOSURE OR USE OF THIS DRAWING, IN WHOLE OR IN PART, IS HEREBY PROHIBITED EXCEPT AS SPECIFIED IN WRITING BY GLOBTEK, INC. © GlobTek, Inc. 2018 - 2025
guest / 05/14/2025 11:48:39 AM GMT CLONED FROM TR9WG1200T00-IMR6B

Special Options

1. Removal of LED (optional)
2. Custom cord-sets (custom cord and/or connector types). Note: 5VDC USB power supplies with Micro-B or Type-C connectors have a voltage regulation specification of ±8% (4.6V to 5.4V).
3. Custom markings
4. Short term output surge capability
5. Reduced leakage current versions (10uA max) for Type-CF medical applications and/or for AC noise sensitive equipment. (15W or less, 5 to 24V output voltage range.)
6. Tightened output voltage tolerance
7. Reduced output voltage ripple
8. Improved reliability PCB laminate with plated-through-holes for IPC610 Class 2 compliance
9. Custom housing colors
10. Quasi constant-current output for SLA (lead-acid) battery charging applications

TO ADDRESS SYSTEM-LEVEL EMI CONCERNS, FERRITE CHOKES/BEADS MAY BE ADDED/REVISED UPON REQUEST. A SAMPLE KIT OF GLOBTEK'S STANDARD FERRITES IS AVAILABLE UNDER GLOBTEK P/N: EMI-MITIGATION-KIT1

FOR ADDITIONAL INFORMATION, PLEASE READ OUR WHITE PAPER AT: https://r.globtek.info/3QeaqtD

INGRESS PROTECTION: IP42

PROPRIETARY INFORMATION
PROPRIETARY OF GLOBTEK, INC. ANY REPRODUCTION, DISCLOSURE OR USE OF THIS DRAWING, IN WHOLE OR IN PART, IS HEREBY PROHIBITED EXCEPT AS SPECIFIED IN WRITING BY GLOBTEK, INC. © GlobTek, Inc. 2018 - 2025
guest / 05/14/2025 11:48:39 AM GMT CLONED FROM TR9WG1200T00-IMR6B

GlobTek, Inc. www.globtek.com 186 Veterans Drive, Northvale, NJ 07647 Tel. (201) 784-1000 Fax (201) 784-0111	Drawing Title: GTM96180-1830-11.0-T2A, ICT / ITE / Medical Power Supply/Class 2/Household Power Supply, Efficiency Level: USA DOE Level VI / Eco-design Directive 2009/125/EC, (EU) 2019/1782, Case Color/Style: GlobTek Black, Desktop/External, Regulated Switchmode AC-DC Power Supply AC Adaptor, Input Rating: 100-240V~, 50-60 Hz, IEC 60320/C18, , Output Rating: 18.00W, 19.0V@0.94A, Pin Out: Polarity Configuration T00 All plugs are Medical Grade, Locking, Polarized once installed, and single use only. Product demonstration link: https://en.globtek.com/news/t00-changeable-output-plug-system-for-power-supplies MOLDED CONNECTORS AVAILABLE, Output Configuration: 1500 mm, 18/2 Cond, Round Black, T-plug system (includes 5.5x2.5, 5.5x2.1, 3.5x1.3mm plugs in each kit), Ferrite: None, GlobTek Black, GT Cord # C3775, Blades/Input Cord: (Order Separately), Approvals:	
	Model No. GTM96180-1830-11.0-T2A	
	Part No./Ordering No. TR9WZ940T00-IMR6B	Rev A

3D File Download https://www.globtek.com/dl/GTM96180-T2A.igs

Mechanical drawing

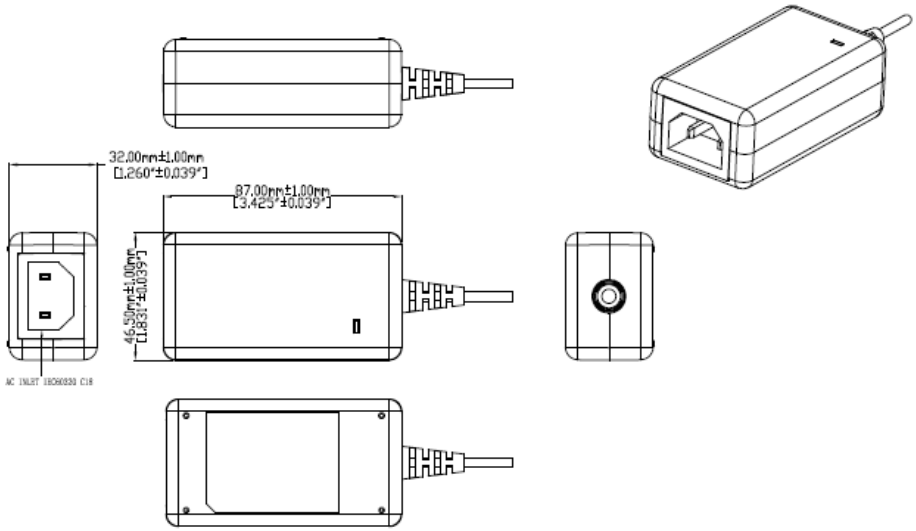

PROPRIETARY INFORMATION
PROPRIETARY OF GLOBTEK, INC. ANY REPRODUCTION, DISCLOSURE OR USE OF THIS DRAWING, IN WHOLE OR IN PART, IS HEREBY PROHIBITED EXCEPT AS SPECIFIED IN WRITING BY GLOBTEK, INC. © GlobTek, Inc. 2018 - 2025
guest / 05/14/2025 11:48:39 AM GMT CLONED FROM TR9WG1200T00-IMR6B

Product Image

Web Overview

https://www.globtek.com/_0/TR9WZ940T00-IMR6B/o

PROPRIETARY INFORMATION

PROPRIETARY OF GLOBTEK, INC. ANY REPRODUCTION, DISCLOSURE OR USE OF THIS DRAWING, IN WHOLE OR IN PART, IS HEREBY PROHIBITED EXCEPT AS SPECIFIED IN WRITING BY GLOBTEK, INC. © GlobTek, Inc. 2018 - 2025

guest / 05/14/2025 11:48:39 AM GMT CLONED FROM TR9WG1200T00-IMR6B

DERATING CURVE

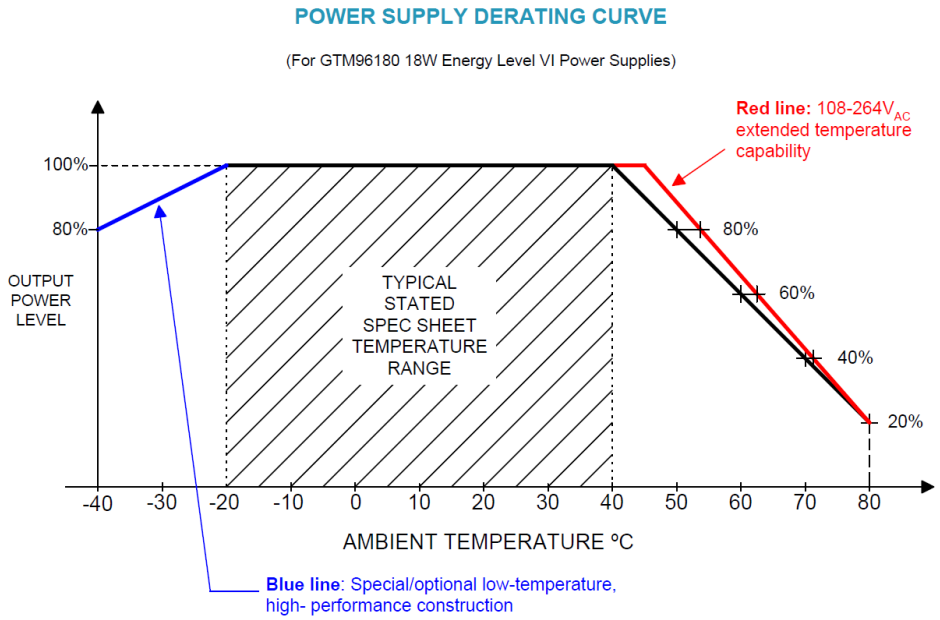

PROPRIETARY INFORMATION

PROPRIETARY OF GLOBTEK, INC. ANY REPRODUCTION, DISCLOSURE OR USE OF THIS DRAWING, IN WHOLE OR IN PART, IS HEREBY PROHIBITED EXCEPT AS SPECIFIED IN WRITING BY GLOBTEK, INC. © GlobTek, Inc. 2018 - 2025

guest / 05/14/2025 11:48:39 AM GMT CLONED FROM TR9WG1200T00-IMR6B

INPUT CONFIGURATION

(F1) Floating output, Class II / double insulated

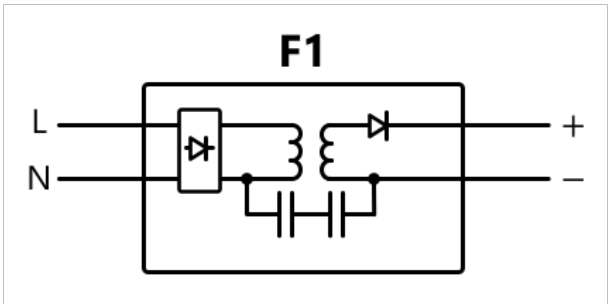

Alternate grounding configurations available upon request.

Blades/Cord Included:None(Order Separately)

Blades/Cord Installed:None(Order Separately)

T2A Inlet (IEC 60320/C18)
IEC 60320/C18 AC Inlet connector, Class II, Non-Earth Ground

Mates with IEC 60320/C17 Plug

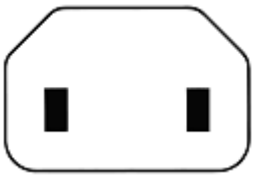

Standard International IEC 320/C17 Cordsets

Below are standard cordsets which are "not included" (unless stated above); these may be purchased separately or packaged with the power supply. Please contact your Sales Engineer if the style required is not shown below. Many more available in different lengths, colors or cable material.

Part Number/ Link	Country	Plug	Termination	Length (mm)	Length (Ft)
209A4062M071(R)	Argentina (Type I)	IRAM 2063	IEC320/C17	2000	6.6
5014112M071A(R)	Australia (Type I)	AS3112	IEC 320/C17	2000	6
204B4062M071(R)	Brazil (Type N)	NRR 14136	IEC320/C17	2000	6.6
4533502M071(R)	China (Type A)	GB 2099.1	IEC320/C17	2000	6.6

PROPRIETARY INFORMATION
PROPRIETARY OF GLOBTEK, INC. ANY REPRODUCTION, DISCLOSURE OR USE OF THIS DRAWING, IN WHOLE OR IN PART, IS HEREBY PROHIBITED EXCEPT AS SPECIFIED IN WRITING BY GLOBTEK, INC. © GlobTek, Inc. 2018 - 2025
guest / 05/14/2025 11:48:39 AM GMT CLONED FROM TR9WG1200T00-IMR6B

2074232M071C(R)	Europe (2.5A, Type C)	CEE 7/7	IEC 320/C17	2000	6.6
489C4232M071A(R)	Europe (10A)	CEE 7/17	IEC320/C17	2000	6.6
208A41111M8071A(R)	India (Type D)	IS 1293	IEC 320/C17	1800	6
451J3322M071A	Japan (Type A)	JIS 8303	IEC320/C17	2000	6.6
401P1086F071A(R)	North America (Type A)	NEMA 1-15P	IEC 320/C17	1828	6
401P1219F71A	North America (Type A)	NEMA 1-15P	IEC 320/C17	2743	9
4033321M8071(R)	Taiwan (Type A)	CNS10917	IEC 320/C17	1800	6
6104232M071A(R)	UK, Hong Kong, Singapore, Gulf States (Type G)	BS1363 (Fuse 3A)	IEC 320/C17	2000	6.6
6303742M571A(R)	Thailand (Type C)	TIS 166-2549	IEC 320/C17	2500	8

PROPRIETARY INFORMATION

PROPRIETARY OF GLOBTEK, INC. ANY REPRODUCTION, DISCLOSURE OR USE OF THIS DRAWING, IN WHOLE OR IN PART, IS HEREBY PROHIBITED EXCEPT AS SPECIFIED IN WRITING BY GLOBTEK, INC. © GlobTek, Inc. 2018 - 2025

guest / 05/14/2025 11:48:39 AM GMT CLONED FROM TR9WG1200T00-IMR6B

OUTPUT CORD AND CONNECTOR: T00/C3775

ACTUAL CONNECTORS, OVERMOLDS, FERRITES MAY VARY SLIGHTLY FROM THE PICTURE BELOW

CABLE TYPE	Round Black
CABLE LENGTH (mm)	1500
CABLE TOLERANCE (mm)	± 50
WIRE GAUGE (AWG)	18
CONDUCTORS	2
HANK DIMENSION (mm)	80 ± 10
CABLE / CONNECTOR OVERMOLD COLOR	GlobTek Black
FERRITE TYPE AND DIMENSION	None
FERRITE NUMBER OF TURNS(Definition)	N/A
FERRITE DIMENSION FROM STRAIN RELIEF	N/A
FERRITE DIMENSION FROM PLUG	N/A
PLUG TYPE	T-plug system (includes 5.5x2.5, 5.5x2.1, 3.5x1.3mm plugs in each kit)
OUTPUT CONNECTOR GENDER	not applicable
OVERMOLDED	Yes
OVER MOLD ORIENTATION	Straight
CONNECTOR PIN OUT	Polarity Configuration T00 All plugs are Medical Grade, Locking, Polarized once installed, and single use only. Product demonstration link: https://en.globtek.com/news/t00-changeable-output-plug-system-for-power-supplies MOLDED CONNECTORS AVAILABLE
ADDITIONAL REQUIREMENTS	UL1310 Warning Label Up To 36 Volts with plugs

This novel system allows for rapid shipment of prototype samples or small quantities of common output voltage and current which can fullfill the needs of most common barrel plug specs. The table below explains the standard and non standard options available as part of this system. This system also allows for both Center Positive and Center Negative polarity.
The T00 plug and adapters are Medical Grade, single use only, Polarized after installation, and not removable without use of special tool.
Any of the below options, and more, are available as molded plugs from stock or special order. Please contact GlobTek for more information.

PROPRIETARY INFORMATION
PROPRIETARY OF GLOBTEK, INC. ANY REPRODUCTION, DISCLOSURE OR USE OF THIS DRAWING, IN WHOLE OR IN PART, IS HEREBY PROHIBITED EXCEPT AS SPECIFIED IN WRITING BY GLOBTEK, INC. © GlobTek, Inc. 2018 - 2025
guest / 05/14/2025 11:48:39 AM GMT CLONED FROM TR9WG1200T00-IMR6B

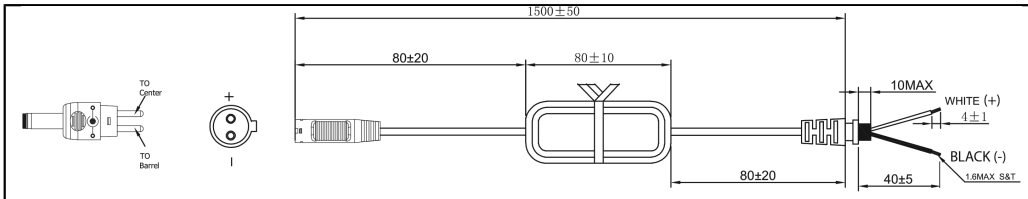

Cable OD 4.8 ± 0.15 mm
Individual conductor (Black & White) OD value of this 18 AWG cable is 2.0 ± 0.1 mm

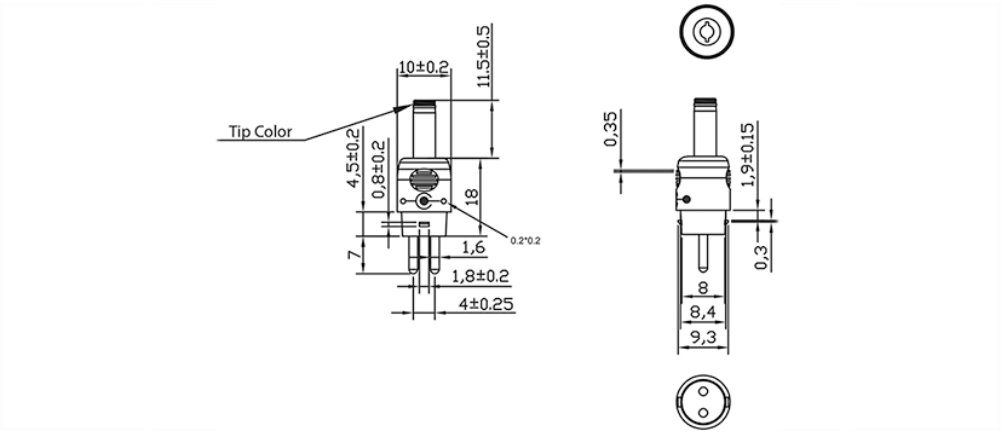

Option upon request: STRAIGHT Female Barrels are available for special order in any length between 9mm-14mm
This novel system allows for rapid shipment of prototype samples or small quantities of common output voltage and current which can fulfill the needs of most common barrel plug as well as male plug specs. The table explains the standard and non-standard options available as part of this system. This system also allows for both Center Positive and Center Negative
polarity.
The T00 plug and adapters are Medical Grade, single use only, Polarized after installation, and not removable without use of special tool.

Any of the below options, and more, are available as molded plugs from stock or special order. Please contact GlobTek for more information

PROPRIETARY INFORMATION
PROPRIETARY OF GLOBTEK, INC. ANY REPRODUCTION, DISCLOSURE OR USE OF THIS DRAWING, IN WHOLE OR IN PART, IS HEREBY PROHIBITED EXCEPT AS SPECIFIED IN WRITING BY GLOBTEK, INC. © GlobTek, Inc. 2018 - 2025
guest / 05/14/2025 11:48:39 AM GMT CLONED FROM TR9WG1200T00-IMR6B

GlobTek, Inc.
www.globtek.com
186 Veterans Drive,
Northvale, NJ 07647
Tel. (201) 784-1000
Fax (201) 784-0111

Drawing Title: GTM96180-1830-11.0-T2A, ICT / ITE / Medical Power Supply/Class 2/Household Power Supply, Efficiency Level: USA DOE Level VI / Eco-design Directive 2009/125/EC, (EU) 2019/1782, Case Color/Style: GlobTek Black, Desktop/External, Regulated Switchmode AC-DC Power Supply AC Adaptor, Input Rating: 100-240V~, 50-60 Hz, IEC 60320/C18, , Output Rating: 18.00W, 19.0V@0.94A, Pin Out: Polarity Configuration T00 All plugs are Medical Grade, Locking, Polarized once installed, and single use only. Product demonstration link: https://en.globtek.com/news/t00-changeable-output-plug-system-for-power-supplies MOLDED CONNECTORS AVAILABLE, Output Configuration: 1500 mm, 18/2 Cond, Round Black, T-plug system (includes 5.5x2.5, 5.5x2.1, 3.5x1.3mm plugs in each kit), Ferrite: None, GlobTek Black, GT Cord # C3775, Blades/Input Cord: (Order Separately), Approvals:

Model No. GTM96180-1830-11.0-T2A

Part No./Ordering No. TR9WZ940T00-IMR6B | Rev A

Part #	CROSS REFERENCE	OUTER DIAMETER	INNER DIAMETER	PIN	LENGTH	FORM FACTOR	MALE/FEMALE	INCLUDED IN T00 KIT	TIP COLOR	BUY NOW
T-K-11-S(R)	Philmore® 204/2049	3.5	1.3	-	11	STRAIGHT	Female	x	Blue	BUY NOW
T-EJ2-95-S(R)	Philmore® 240 plug	4	1.7	-	9.5	STRAIGHT	Female	Order Separately	Brown	BUY NOW
T-EJ3-95-S(R)	Philmore® 275 plug	4.75	1.7	-	9.5	STRAIGHT	Female	Order Separately	Red	BUY NOW
T-C-95-S(R)	Switchcraft® 722A	5.5	2.1	-	9.5	STRAIGHT	Female	Order Separately	Yellow	BUY NOW
T-C-12-S(R)	Switchcraft® 722A	5.5	2.1	-	12	STRAIGHT	Female	x	Yellow	BUY NOW
T-L-95-S(R)	Switchcraft® 712A	5.5	2.5	-	9.5	STRAIGHT	Female	Order Separately	Black	BUY NOW
T-L-12-S(R)	Switchcraft® 712A	5.5	2.5	-	12	STRAIGHT	Female	x	Black	
T-EJ4-95-S(R)	Philmore® 255 plug	5.5	3.3	1	9.5	STRAIGHT	Female	Order Separately	Orange	BUY NOW
T-EJ1-95-S(R)	Philmore® 235 plug	2.35	0.7		9.5	STRAIGHT	Female	Order Separately	Yellow	BUY NOW
T-3.2-0.9-9.0-S(R)	CUI PP3-017/ PP-017	3.2	0.9		9	STRAIGHT	Female	Order Separately	Black	BUY NOW
T-P-S-STER-14(R)	CUI SP-3501	3.5	-	Stereo	14	STRAIGHT	Male	Order Separately	-	BUY NOW
T-P-S-MONO-14(R)	CUI MP3-3501	3.5	-	Mono	14	STRAIGHT	Male	Order Separately	-	BUY NOW
T-S-S-MONO-11(R)	CUI MP3-2501	2.5	-	Mono	11	STRAIGHT	Male	Order Separately	-	BUY NOW
T-S-S-STER-11(R)	CUI SP-25401	2.5	-	Stereo	11	STRAIGHT	Male	Order Separately	-	BUY NOW
T-EJ5-115-S(R)	SCHURTER 4840.1230	6.5	1	1	11.5	STRAIGHT	Male	Order Separately	Black	BUY NOW
T-USB-TYPE-C(R)	USBC	--	--	--	6.65	STRAIGHT	Male	Order Separately		BUY NOW
T-L-LKWG-S(R)	KYCON KLDX-PA-0202-B-LT	5.5	2.5	--	9.5	STRAIGHT	Female	Order Separately	Black	BUY NOW

PROPRIETARY INFORMATION
PROPRIETARY OF GLOBTEK, INC. ANY REPRODUCTION, DISCLOSURE OR USE OF THIS DRAWING, IN WHOLE OR IN PART, IS HEREBY PROHIBITED EXCEPT AS SPECIFIED IN WRITING BY GLOBTEK, INC. © GlobTek, Inc. 2018 - 2025
guest / 05/14/2025 11:48:39 AM GMT CLONED FROM TR9WG1200T00-IMR6B

T-C-S-LKWG-S(R)	KYCON KLDX-PA-0202-A-LT	5.5	2.1 --	9.5 STRAIGHT	Female	Order Separately	Black	BUY NOW

ADDITIONAL OUTPUT PLUG OPTIONS ARE AVAILABLE AT https://www.globtek.com/en/connectors
STANDARD PLUGS AND CONNECTORS CAN BE SEEN ONLINE AT https://www.globtek.com/en/connectors
CALCULATE VOLTAGE REGULATION/DROP WITH OUR ONLINE CALCULATOR: https://www.globtek.com/r2/PtqjjL

PROPRIETARY INFORMATION
PROPRIETARY OF GLOBTEK, INC. ANY REPRODUCTION, DISCLOSURE OR USE OF THIS DRAWING, IN WHOLE OR IN PART, IS HEREBY PROHIBITED EXCEPT AS SPECIFIED IN WRITING BY GLOBTEK, INC. © GlobTek, Inc. 2018 - 2025
guest / 05/14/2025 11:48:39 AM GMT CLONED FROM TR9WG1200T00-IMR6B

OUTPUT CONNECTOR HOOK UP

TO ADDRESS SYSTEM-LEVEL EMI CONCERNS, FERRITE CHOKES/BEADS MAY BE ADDED/REVISED UPON REQUEST. A SAMPLE KIT OF GLOBTEK'S STANDARD FERRITES IS AVAILABLE UNDER GLOBTEK P/N: EMI-MITIGATION-KIT1

FOR ADDITIONAL INFORMATION, PLEASE READ OUR WHITE PAPER AT:
https://www.globtek.com/en/technical-articles/ferrite-kit-radiated-emi-suppression-kit-for-globtek-power-supplies-cable-assemblies

PROPRIETARY INFORMATION
PROPRIETARY OF GLOBTEK, INC. ANY REPRODUCTION, DISCLOSURE OR USE OF THIS DRAWING, IN WHOLE OR IN PART, IS HEREBY PROHIBITED EXCEPT AS SPECIFIED IN WRITING BY GLOBTEK, INC. © GlobTek, Inc. 2018 - 2025
guest / 05/14/2025 11:48:39 AM GMT CLONED FROM TR9WG1200T00-IMR6B

LABEL:L-1186

LABEL P/N	Standard GT
MATERIAL	Flat Thermal Transfer, Imprintable, Polyester Label and/or Pad Printed and/or Molded, and/or Laser Engraved in the case
BACKGROUND COLOR	Black if housing is Black, White or Silver if housing is White or Gray.
TEXT COLOR	White or Silver if label is Black Background for Black housing. Black if label is White or Silver background and Housing is White or Gray.
LABEL WIDTH (mm)	36.5
LABEL HEIGHT (mm)	48.5
SPECIAL BARCODE LABEL MATERIAL	No

Below is the minimum information which will appear on the label. NOTE: in the logo area additional/actual positioning of symbols and text is subjected to change as per agency updates/requirements or additional model approvals become available.
Regulatory certifications/label markings may be in logo area on the label or molded into the case housing outside the label area.
Information will be shown via label and/or pad printed and/or molded and/or laser engraved in the case. * Date code markings at GlobTek option
.

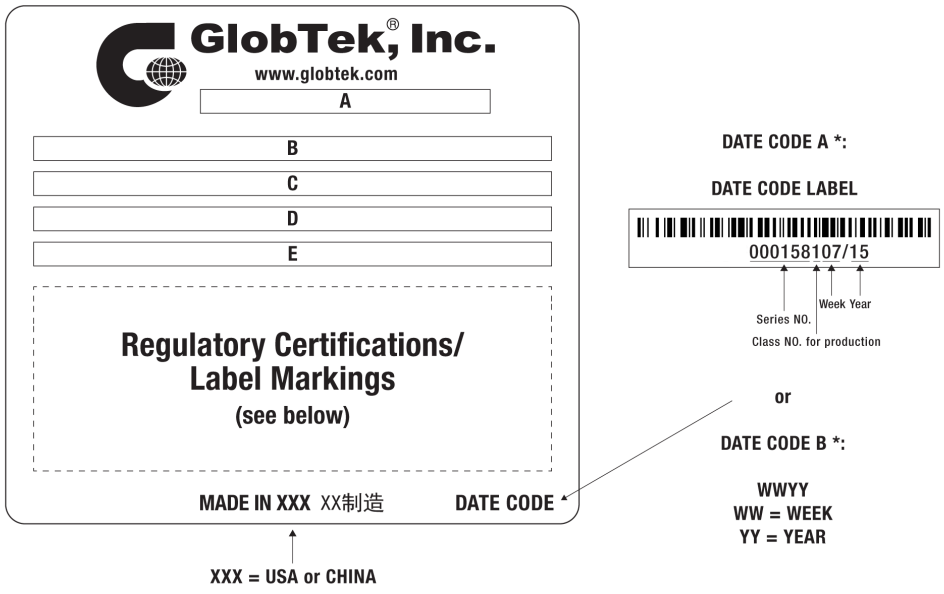

A=ICT / ITE / Medical Power Supply/Class 2/Household Power Supply
B=P/N: (料号) TR9WZ940T00-IMR6B
C=Model (型号) GTM96180-1830-11.0-T2A
D=Input (输入)100-240V~, 50-60 Hz, 0.6 A
E=Output (输出)19.0 V ⎓ 0.94 A, 18.00W

PROPRIETARY INFORMATION
PROPRIETARY OF GLOBTEK, INC. ANY REPRODUCTION, DISCLOSURE OR USE OF THIS DRAWING, IN WHOLE OR IN PART, IS HEREBY PROHIBITED EXCEPT AS SPECIFIED IN WRITING BY GLOBTEK, INC. © GlobTek, Inc. 2018 - 2025
guest / 05/14/2025 11:48:39 AM GMT CLONED FROM TR9WG1200T00-IMR6B

AGENCY ONLINE DOCUMENTS	http://www.globtek.info/certs/GTM96180-TZ/
CE EC-Declaration for Medical	https://cs.globtek.info/ec_declaration_product?id=01t0c000008qe6l&m=1
CE EC-Declaration for Industrial/Commercial/ITE	https://cs.globtek.info/ec_declaration_product?id=01t0c000008qe6l&i=2
CE EC-Declaration for Household	https://cs.globtek.info/ec_declaration_product?id=01t0c000008qe6l&h=2
UKCA-Declaration for Medical	https://cs.globtek.info/ukca_declaration_product?id=01t0c000008qe6l&m=1
UKCA-Declaration for Industrial/Commercial/ITE	https://cs.globtek.info/ukca_declaration_product?id=01t0c000008qe6l&i=2
UKCA-Declaration for Household	https://cs.globtek.info/ukca_declaration_product?id=01t0c000008qe6l&h=2
Morocco SDoC Declaration	https://cs.globtek.info/Morocco_SDoC_Declaration?id=a0O0c00000PHESvEAP
RoHS/RoHS3 Declaration	https://www.globtek.com/pdf/rohs_cert/01t0c000008qe6lAAA
REACH Declaration	https://www.globtek.com/pdf/iso_certificates/REACH.pdf
Conflict Minerals Declaration	https://www.globtek.com/pdf/conflict-minerals.pdf
Prop 65 Statement	https://www.globtek.com/prop-65-statement.pdf

IPXY rating is based on 3rd party testing and customers should check suitability and test system level IPXY rating before ordering.

Regulatory Certifications/Label Markings

Below follows a link to the latest regulatory certifications and marks for this specific product. National standards as well as certification schemes are constantly changing and so is the set of certification marks and symbols applicable to this product. Various standards, marks and symbols, and certificates are subject to change at any time without notice.

Additional standards or unique country certifications are available upon request. Please contact Globtek to request a quotation.

LATEST PRODUCT/MODEL CERTIFICATIONS:	https://www.globtek.com/ds/nqxQqp3GmmM/dbef5zzi5XQ.html#datasheet
AGENCY ONLINE DOCUMENTS	http://www.globtek.info/certs/GTM96180-TZ/

(F1) Floating output, Class II / double insulated

Polarity Configuration T00 All plugs are Medical Grade, Locking, Polarized once installed, and single use only.
Product demonstration link:
https://en.globtek.com/news/t00-changeable-output-plug-system-for-power-s

MOLDED CONNECTORS AVAILABLE

PROPRIETARY INFORMATION
PROPRIETARY OF GLOBTEK, INC. ANY REPRODUCTION, DISCLOSURE OR USE OF THIS DRAWING, IN WHOLE OR IN PART, IS HEREBY PROHIBITED EXCEPT AS SPECIFIED IN WRITING BY GLOBTEK, INC. © GlobTek, Inc. 2018 - 2025
guest / 05/14/2025 11:48:39 AM GMT CLONED FROM TR9WG1200T00-IMR6B

PACKAGING

Packing Spec P/N	Packing for DT plug model with T00 plug and manual
Packing Quantity/Multiple/MPQ	60
Gift Box Size (mm)	147*100*33
Gift Box Color	White
Master Carton Size (mm)	455 x 405 x 220
Master Carton Cubic Volume (m³)	0.04
Master GW (Kg)	10.8 kg
BLADES INCLUDED	None: (Order Separately)
BLADE/CORD INSTALLED	None: (Order Separately)
USER MANUAL*	809-DESKTOPUSERMANUAL on A4 paper
USER MANUAL WEB LINK	https://www.globtek.com/pdf/809-DESKTOPUSERMANUAL.jpg

* This specification sheet is considered the user manual for all applications. It is expected that the buyer of this product will use it to formulate their own user manual for their end product and a user manual specifically for the power adapter is not usually required. If a user manual is not specifically listed above then none will be provided with this unit.

If specific packaging is required, this section must specify all requirements and note “no exceptions”. If this section does not specify packaging, it is subject to change without notice at GlobTek’s discretion

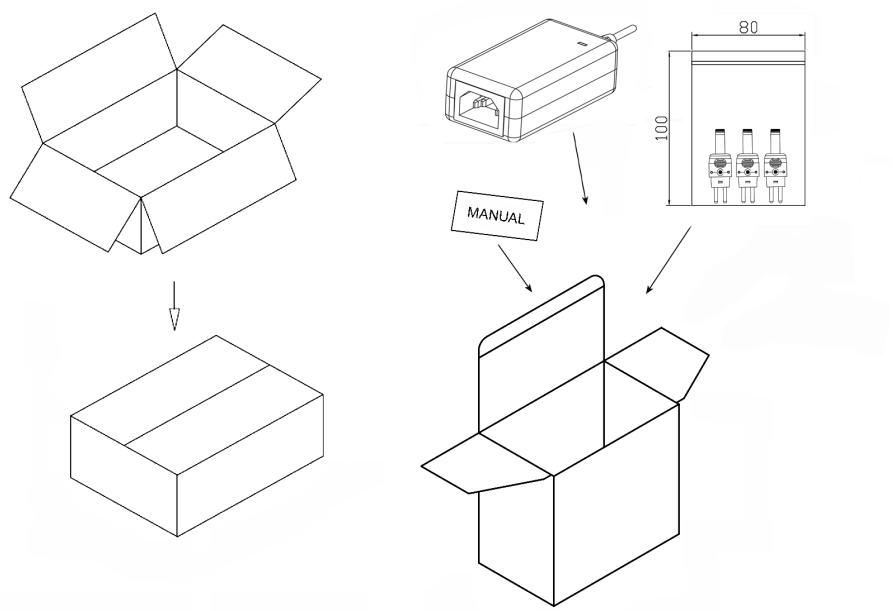

PROPRIETARY INFORMATION
PROPRIETARY OF GLOBTEK, INC. ANY REPRODUCTION, DISCLOSURE OR USE OF THIS DRAWING, IN WHOLE OR IN PART, IS HEREBY PROHIBITED EXCEPT AS SPECIFIED IN WRITING BY GLOBTEK, INC. © GlobTek, Inc. 2018 - 2025
guest / 05/14/2025 11:48:39 AM GMT CLONED FROM TR9WG1200T00-IMR6B

Manual for T00-plug:

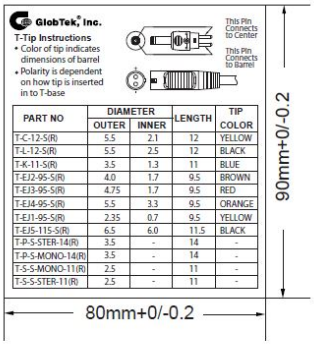

PART NO	DIAMETER OUTER	DIAMETER INNER	LENGTH	TIP COLOR
T-C-12-S(R)	5.5	2.1	12	YELLOW
T-L-12-S(R)	5.5	2.5	12	BLACK
T-K-11-S(R)	3.5	1.3	11	BLUE
T-EJ2-9S-S(R)	4.0	1.7	9.5	BROWN
T-EJ3-9S-S(R)	4.75	1.7	9.5	RED
T-EJ4-9S-S(R)	5.5	3.3	9.5	ORANGE
T-EJ1-9S-S(R)	2.35	0.7	9.5	YELLOW
T-EJ5-11S-S(R)	6.5	6.0	11.5	BLACK
T-P-S-STER-14(R)	3.5	-	14	-
T-P-S-MONO-14(R)	3.5	-	14	-
T-S-S-MONO-11(R)	2.5	-	11	-
T-S-S-STER-11(R)	2.5	-	11	-

正面/SHEET A

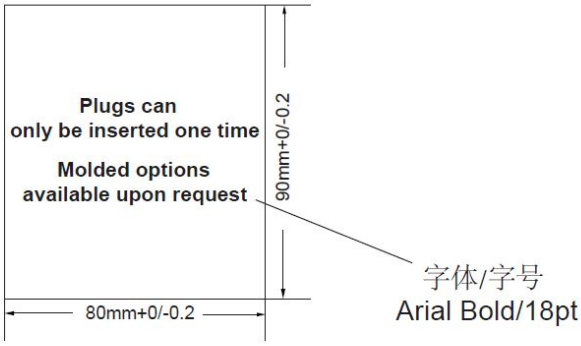

反面/SHEET B

PROPRIETARY INFORMATION
PROPRIETARY OF GLOBTEK, INC. ANY REPRODUCTION, DISCLOSURE OR USE OF THIS DRAWING, IN WHOLE OR IN PART, IS HEREBY PROHIBITED EXCEPT AS SPECIFIED IN WRITING BY GLOBTEK, INC. © GlobTek, Inc. 2018 - 2025
guest / 05/14/2025 11:48:39 AM GMT CLONED FROM TR9WG1200T00-IMR6B

INSTRUCTIONS TO THE OEM SYSTEMS ENGINEER

It is the responsibility of the OEM systems engineer to provide the end system user instructions and warnings for the use of this product in the end system.

If an input cord is required for this product, AC Mains voltage should be provided to the power supply by a power supply cord approved to the national standards of the country in which it will be used.

This product is not designed to be repaired. No serviceable parts inside. A blown internal fuse is an indication of catastrophic failure of circuit component(s). If a Failure Analysis is required for a failed power supply/battery charger, please return the damaged unit to GlobTek for an accurate determination of the root cause of the failure.

EMC Compliance of the complete OEM product, including the GlobTek power supply/battery charger needs to be verified by the OEM systems engineer.

PROPRIETARY INFORMATION

PROPRIETARY OF GLOBTEK, INC. ANY REPRODUCTION, DISCLOSURE OR USE OF THIS DRAWING, IN WHOLE OR IN PART, IS HEREBY PROHIBITED EXCEPT AS SPECIFIED IN WRITING BY GLOBTEK, INC. © GlobTek, Inc. 2018 - 2025

guest / 05/14/2025 11:48:39 AM GMT CLONED FROM TR9WG1200T00-IMR6B

INSTRUCTION SHEET

PROPRIETARY INFORMATION

PROPRIETARY OF GLOBTEK, INC. ANY REPRODUCTION, DISCLOSURE OR USE OF THIS DRAWING, IN WHOLE OR IN PART, IS HEREBY PROHIBITED EXCEPT AS SPECIFIED IN WRITING BY GLOBTEK, INC. © GlobTek, Inc. 2018 - 2025

guest / 05/14/2025 11:48:39 AM GMT CLONED FROM TR9WG1200T00-IMR6B

TERMS AND CONDITIONS

THESE TERMS AND CONDITIONS GOVERN THE SALE OF ALL PRODUCTS AND SERVICES ("PRODUCTS") BY GlobTek, Inc. ("GlobTek") AND APPLY NOTWITHSTANDING ANY CONFLICTING, CONTRARY OR ADDITIONAL TERMS AND CONDITIONS IN ANY PURCHASE ORDER OR OTHER DOCUMENT OR COMMUNICATION ("PURCHASE ORDER") FROM BUYER. THESE TERMS AND CONDITIONS MAY ONLY BE WAIVED OR MODIFIED IN A WRITTEN AGREEMENT SIGNED BY AN AUTHORIZED REPRESENTATIVE OF THE SELLER. NEITHER SELLER'S ACKNOWLEDGEMENT OF A PURCHASE ORDER NOR SELLER'S FAILURE TO OBJECT TO CONFLICTING, CONTRARY OR ADDITIONAL TERMS AND CONDITIONS IN A PURCHASE ORDER SHALL BE DEEMED AN ACCEPTANCE OF SUCH TERMS AND CONDITIONS OR A WAIVER OF THE PROVISIONS HEREOF.

ORDERS:

1. Buyer must issue a Purchase Order or otherwise place an order by means acceptable to GlobTek. Orders shall identify the Products, unit quantities, part numbers, descriptions, applicable prices, ship to address and requested delivery dates. All orders are subject to acceptance by GlobTek. No order may be cancelled or rescheduled without GlobTek’s consent. Consent may be given by GlobTek in its sole discretion. GlobTek reserves the right to add a Rescheduling Fee should Seller deem applicable. Seller reserves the right to allocate sales of Products among its customers in its sole discretion.

RESTOCKING TERMS:

1. Returning of stock items only: All claims must be made within ten (10) days of receipt of goods. GlobTek must authorize all returns. No return of product will be accepted without GlobTek’s Return Merchandise Authorization (RMA) number. All authorized returns will be subject to a minimum of 25% restocking charge* and buyer must pay return freight to GlobTek. Parts must be in original condition and packaging.
2. *Custom items and/or dedicated production lots are not returnable.

RETURNED MERCHANDISE:

1. Replacement or credit will not be allowed for products returned without prior consent. No return of product will be accepted without a GlobTek RMA number. RMA requests for all goods that are found to be not in compliance with Seller's specifications shall be made according to Seller's RMA procedure within thirty (30) days of invoice/shipment date and may be replaced, repaired, or credited at GlobTek's option. All RMA claims reported more than thirty (30) days after the invoice/shipment date are not eligible for return, replacement or credit at subject to GlobTek’s Terms and Conditions. GlobTek will not issue credit if the Product has been altered, repaired, or opened by persons other than those authorized by GlobTek, become defective due to acts of God or negligence, become defective due to being subjected to abnormal conditions during installation, application or maintenance or if warranty has expired. Acceptance of Buyer's debit will not be made until material has been received and evaluated by the GlobTek. To determine the "Root Cause of Failure", the product may be destroyed during evaluation. If this occurs all of the above Terms and Conditions will remain in effect. All freight costs for returns, both from customer back to GlobTek and GlobTek back to customer will not be borne by GlobTek. GlobTek requires all goods to be returned freight, duty, and taxes prepaid to the location provided in the RMA authorization notification and repaired or replaced goods will be provided

PROPRIETARY INFORMATION
PROPRIETARY OF GLOBTEK, INC. ANY REPRODUCTION, DISCLOSURE OR USE OF THIS DRAWING, IN WHOLE OR IN PART, IS HEREBY PROHIBITED EXCEPT AS SPECIFIED IN WRITING BY GLOBTEK, INC. © GlobTek, Inc. 2018 - 2025
guest / 05/14/2025 11:48:39 AM GMT CLONED FROM TR9WG1200T00-IMR6B

on an EX WORKS return location. GlobTek shall not be responsible, under any circumstances, for any rework or modification fee's or costs not previously authorized in writing by GlobTek. If returned goods do not match the quantity or descriptions provided in the RMA application, any non conforming goods will not be qualified for repair, return, or replacement. Goods with illegible date code/serial # information may not be eligible for repair, return, replacement

PRICES/TAXES/TARIFFS:

1. Prices shall be as specified by Seller and shall be applicable for the period specified in GlobTek's quote. If no period is specified, prices shall be applicable for thirty (30) days. Notwithstanding the foregoing, prices shall be subject to increase in the event of an increase in GlobTek's costs or other circumstances beyond GlobTek's reasonable control. Prices are exclusive of taxes, impositions, tariffs, fees, and other charges, including, without limitation, sales, use, excise, value added, and ad valorem taxes, as well as tariffs of all types (including any tariffs imposed pursuant to any Section 301 Action by the United States Trade Representative) and similar taxes, fees, imposts, or charges of whatsoever kind, imposed now or in the future by any foreign or domestic governmental authority, international shipping charges, forwarding agent's and broker's fees, consular fees, document fees and import duties. If GlobTek shall be liable to collect and/or pay, or if the GlobTek shall pay, any of the foregoing, Buyer shall pay same to GlobTek in addition to the price of the Products.

TERMS OF PAYMENT:

1. Payment shall be net thirty (30) days from date of invoice or as otherwise specified by GlobTek. Buyer agrees to pay the entire net amount of each invoice from Seller pursuant to the terms of each such invoice without offset or deduction. Orders are subject to credit approval by GlobTek, which may in its sole discretion at any time change the terms of Buyer's credit, require payment in cash, bank wire transfer, or by official bank check and/or require payment of any or all amounts due or to become due for Buyer's order before shipment of any or any of the Products. If GlobTek believes in good faith that Buyer's ability to make payments may be impaired or if Buyer shall fail to pay any invoice when due, GlobTek may suspend delivery of any order or any remaining balance thereof until such payment is made or cancel any order or any remaining balance thereof, and Buyer shall remain liable to pay for any Products already shipped and all Products ordered by Buyer. Buyer agrees to submit such financial information from time to time as may be reasonably requested by GlobTek for the establishment and/or continuation of credit terms. Checks are accepted subject to collection and the date of collection shall be deemed the date of payment. Any check received from Buyer may be applied by GlobTek against any obligation owing from Buyer to GlobTek, regardless of any statement appearing on or referring to such check, without discharging Buyer's liability for any additional amounts owing from Buyer to GlobTek, and the acceptance by GlobTek of such check shall not constitute a waiver of GlobTek's right to pursue the collection of any remaining balance. Buyer shall pay interest on any invoice not paid when due according to the due date at the rate of eighteen (18%) percent annually or the highest rate allowable by law. If Buyer fails to make payment when due, GlobTek may pursue any legal or equitable remedies, in which event GlobTek shall be entitled to reimbursement for costs of collection and reasonable attorneys fees.

REFUSED OR DAMAGED SHIPMENTS:

1. All products returned to GlobTek due to refusal of acceptance by buyer, without GlobTek authorization, will be subject to minimum of 25% restocking charge* and buyer must pay return freight to GlobTek. Parts must be in original condition and packaging. Seller takes extra precautions to insure that shipments are made under the Highest Quality Standards. In the event a

PROPRIETARY INFORMATION
PROPRIETARY OF GLOBTEK, INC. ANY REPRODUCTION, DISCLOSURE OR USE OF THIS DRAWING, IN WHOLE OR IN PART, IS HEREBY PROHIBITED EXCEPT AS SPECIFIED IN WRITING BY GLOBTEK, INC. © GlobTek, Inc. 2018 - 2025
guest / 05/14/2025 11:48:39 AM GMT CLONED FROM TR9WG1200T00-IMR6B

shipment is received in damaged condition, Buyer shall contact the carrier to submit claim, keep Products in original boxes pending carrier's inspection and place a replacement order with the Seller.

2. *Custom items and/or dedicated production lots are not returnable.

TECHNICAL ADVICE AND DATA:

1. Any technical advice offered or given in connection with the use of any goods is an accommodation to Buyer without charge and GlobTek shall have no responsibility or liability whatsoever for the content or use of such advice. Without GlobTek's prior written consent, Buyer shall not use, duplicate or disclose any technical data delivered or disclosed by GlobTek to Buyer for any purposes other than for installation, operation or maintenance of goods purchased by Buyer. Any use made of GlobTek classifications, whether it be ECCNs or any variation of Harmonized Tariff codes, is without recourse to GlobTek and at the user’s risk. Export classifications are subject to change. If you export or re-export, your company, as the exporter of record, is responsible for determining the correct classification of any item at the time of export. Any export classification by GlobTek is for GlobTek’s internal use only and shall not be construed as a representation or warranty regarding the proper export classification nor relied upon to make licensing determinations.

Tariff Surcharge – Section 301 and Related Import Duties

GlobTek, Inc. hereby notifies all customers that a tariff surcharge fee is applied to cover import duties and tariffs, including but not limited to those imposed under Section 301 of the U.S. Trade Act of 1974, affecting Chinese-origin goods imported into the United States between 2018 and 2025.

Customers receiving delivery from U.S.-based shipping points were and are informed of the tariff surcharge:

- At the time of quotation;
- During order entry; and
- Through routine updates issued during the order process.

Due to the volatility of tariff rates and ongoing changes in U.S. trade policy, GlobTek reserves the right to adjust the tariff surcharge fee:

- To match the current applicable tariff rates, or
- To reflect the maximum applicable tariff rate assessed on the product(s) in question, depending on the date of importation into the U.S.

By placing an order with GlobTek for goods that are produced in china built to order and imported from China, the customer expressly acknowledges and agrees to pay the applicable tariff surcharge fee. This surcharge is non-negotiable and is considered a part of the total purchase price for applicable transactions.

PROPRIETARY INFORMATION
PROPRIETARY OF GLOBTEK, INC. ANY REPRODUCTION, DISCLOSURE OR USE OF THIS DRAWING, IN WHOLE OR IN PART, IS HEREBY PROHIBITED EXCEPT AS SPECIFIED IN WRITING BY GLOBTEK, INC. © GlobTek, Inc. 2018 - 2025
guest / 05/14/2025 11:48:39 AM GMT CLONED FROM TR9WG1200T00-IMR6B

FORCE MAJEURE:

1. GlobTek shall not be liable for failure to fulfill the obligations herein or for delays in delivery due to causes beyond its reasonable control, including, but not limited to, acts of God, natural disasters, acts or omissions of other parties acts or omissions of civil or military authority, Government priorities, changes in law, material shortages, fire, strikes, floods, epidemics, quarantine restrictions, riots, war, acts of terrorism, delays in transportation or inability to obtain labor or materials through its regular sources. GlobTek's time for performance of any such obligation shall be extended for the time period of such delay or GlobTek may, at its option cancel any order or remaining part thereof without liability, advising in writing notice of such cancellation to Buyer.

LIMITATION OF LIABILITIES:

1. BUYER SHALL NOT IN ANY EVENT BE ENTITLED TO, AND SELLER SHALL NOT BE LIABLE FOR INDIRECT, SPECIAL, INCIDENTAL OR CONSEQUENTIAL DAMAGES OF ANY NATURE INCLUDING, WITHOUT LIMITATION BUSINESS INTERRUPTION COSTS, REMOVAL AND/OR REINSTALLATION COSTS, REPROCUREMENT COSTS, LOSS OF PROFIT OR REVENUE, LOSS OF DATA, PROMOTIONAL OR MANUFACTURING EXPENSES, OVERHEAD, INJURY TO REPUTATION OR LOSS OF CUSTOMERS, EVEN IF GLOBTEK HAS BEEN ADVISED OF THE POSSIBILITY OF SUCH DAMAGES. BUYER'S RECOVERY FROM SELLER FOR ANY CLAIM SHALL NOT EXCEED BUYER'S PURCHASE PRICE FOR THE PRODUCT GIVING RISE SUCH CLAIM IRRESPECTIVE OF THE NATURE OF THE CLAIM, WHETHER IN CONTRACT, TORT, WARRANTY OR OTHERWISE. GLOBTEK SHALL NOT BE LIABLE FOR AND BUYER SHALL INDEMNIFY, DEFEND AND HOLD GLOBTEK HARMLESS FROM ANY CLAIMS BASED ON GLOBTEK'S COMPLIANCE WITH BUYER'S DESIGNS, SPECIFICATIONS OR INSTRUCTIONS, OR MODIFICATION OF ANY PRODUCTS BY PARTIES OTHER THAN SELLER, OR USE IN COMBINATION WITH OTHER PRODUCTS. GLOBTEK INC. WILL NOT BE LIABLE FOR THE SAFETY AND PERFORMANCE OF THESE PRODUCTS IF UNAUTHORIZED USE, ACCESS AND/OR REPAIR. END USER SHOULD CONSULT APPLICABLE UL, CSA OR EN STANDARDS FOR PROPER INSTALLATION INSTRUCTIONS. GLOBTEK PRODUCTS ARE NOT AUTHORIZED FOR USE AS MISSION CRITICAL COMPONENTS IN LIFE SUPPORT, HAZARDOUS ENVIRONMENT, NUCLEAR OR AIRCRAFT APPLICATIONS WITHOUT PRIOR WRITTEN APPROVAL FROM THE CEO OF GLOBTEK INC. CONTENTS OF GLOBTEK SPECIFICATIONS ARE SUBJECT TO CHANGE WITHOUT PRIOR NOTICE.

GENERAL:

1. As used herein, terms appearing in the singular shall include the plural and terms appearing in the plural shall include singular. No rights, duties, agreements or obligations hereunder may be assigned or transferred by either party, by operation of law, merger or otherwise, without the prior written consent of the other. Any attempted or purported assignment shall be void. Notwithstanding the foregoing, GlobTek's obligations under these Terms and Conditions may be performed by divisions, subsidiaries or affiliates of GlobTek. The obligations, rights, terms and conditions hereof shall be binding on the parties hereto and their respective successors and assigns. The waiver of any provision hereof or of any breach or default hereunder shall not be deemed a waiver of any other provision hereof or breach or default hereunder. Any provision hereof which is prohibited or

PROPRIETARY INFORMATION
PROPRIETARY OF GLOBTEK, INC. ANY REPRODUCTION, DISCLOSURE OR USE OF THIS DRAWING, IN WHOLE OR IN PART, IS HEREBY PROHIBITED EXCEPT AS SPECIFIED IN WRITING BY GLOBTEK, INC. © GlobTek, Inc. 2018 - 2025
guest / 05/14/2025 11:48:39 AM GMT CLONED FROM TR9WG1200T00-IMR6B

unenforceable in any jurisdiction shall, as to such jurisdiction, be ineffective to the extent of such prohibition or unenforceability without invalidating the remaining provisions hereof in that jurisdiction or affecting the validity or enforceability of such provision in any other jurisdiction. These Terms and Conditions shall be governed by and construed in accordance with the laws of the State of New Jersey, United States, excluding any law or principle, which would apply the law of any other jurisdiction. The United Nations Convention on contracts for the International Sale of Goods shall not apply to these Terms.

LIMITED WARRANTIES:

1. GLOBTEK'S POWER SUPPLIES ARE BUILT WITH PRIDE BY PROFESSIONALS DEDICATED TO UNCOMPROMISING QUALITY AND RELIABILITY. YOUR COMPLETE SATISFACTION WITH OUR PRODUCTS IS OUR PARAMOUNT OBJECTIVE. IF GLOBTEK IS GIVEN NOTICE OF A DEFECT IN MATERIALS OR WORKMANSHIP OCCURRING WITHIN FIVE (5) YEARS FROM THE DATE OF SHIPMENT BY GLOBTEK, THEN GLOBTEK SHALL, AT ITS SOLE OPTION: 1) REPAIR OR REPLACE THE DEFECTIVE PART(S) OR PRODUCT(S) OR 2) REFUND THE ORIGINAL PURCHASE PRICE, BOTH SUBJECT TO THE FOLLOWING PROVISIONS OF THIS PARAGRAPH. THIS WARRANTY ONLY EXTENDS TO POWER SUPPLIES, ELECTRICAL ASSEMBLIES AND POWER CABLES MADE BY GLOBTEK. THIS WARRANTY DOES NOT EXTEND TO ANY AND ALL BATTERY CELLS, OR TO BRANDED CONNECTOR ITEMS, CUSTOMER SPECIFIED ITEMS FROM OTHER MANUFACTURERS, CUSTOMER SUPPLIED MATERIALS, OR DEFECTS RESULTING FROM CUSTOMER SUPPLIED MATERIALS. DEFECTS RESULTING FROM CUSTOMER SUPPLIED MATERIALS WILL NULLIFY THIS WARRANTY. THIS WARRANTY ALSO DOES NOT EXTEND TO PRODUCTS WHICH HAVE BEEN OPENED, ALTERED OR REPAIRED BY PERSONS OTHER THAN PERSONS AUTHORIZED BY THE MANUFACTURER OR TO PRODUCTS WHICH BECOME DEFECTIVE DUE TO ACTS OF GOD AND OTHER ACTS CONSTITUTING FORCE MAJEURE AS DEFINED IN SECTION 8 ABOVE, NEGLIGENCE OR THE FAILURE OF THE USER TO FULLY FOLLOW INSTRUCTIONS WITH RESPECT TO INSTALLATION, APPLICATION OR MAINTENANCE. THIS WARRANTY DOES NOT EXTEND TO PRODUCTS WHICH HAVE BEEN SUBJECT TO ABNORMAL USE, ABNORMAL CONDITIONS, IMPROPER STORAGE, SPILLAGE OF LIQUIDS, MISUSE, NEGLECT, EXPOSURE TO CLEANING AGENTS NOT RECOMMENDED BY THE MANUFACTURER, OR OTHER ACTS WHICH ARE NOT THE FAULT OF GLOBTEK. THIS WARRANTY DOES NOT COVER ORDINARY WEAR AND TEAR, DEFECTS IN APPEARANCE, COSMETIC, DECORATIVE OR STRUCTURAL ITEMS OR NON-OPERATIVE PARTS. WITH REGARD TO BATTERY CELLS, OR TO BRANDED CONNECTOR ITEMS, CUSTOMER SPECIFIED ITEMS FROM OTHER MANUFACTURERS, AND CUSTOMER SUPPLIED MATERIALS, THE BUYER IS REFERRED TO THE MANUFACTURER'S WARRANTY, IF ANY. FOR RECHARGEABLE BATTERY PACK PRODUCTS, ANY CLAIM FOR WARRANTY MUST BE SUPPORTED BY AUDITABLE EVIDENCE OF PROPER USE, HANDLING, AND MAINTENANCE ACCORDING TO GLOBTEK AND CELL MANUFACTURER SPECIFICATIONS. THIS WARRANTY IS NOT A WARRANTY OF FUTURE PERFORMANCE. IN ORDER TO EXERCISE THE BUYER'S REMEDY FOR BREACH OF THIS LIMITED WARRANTY, GLOBTEK MUST BE GIVEN WRITTEN NOTICE OF A DEFECT IN MATERIALS OR WORKMANSHIP WITHIN FIVE (5) YEARS OF THE DATE OF SHIPMENT. FURTHER, GLOBTEK'S INSPECTION ESTABLISHES THE EXISTENCE OF A DEFECT. PACKAGING, FREIGHT, INSURANCE AND OTHER CHARGES INCURRED IN RETURNING THE DEFECTIVE PRODUCTS TO WILL BE PAID BY THE BUYER. IF THE BUYER FAILS TO FULLY COMPLY WITH THE FOREGOING, BUYER SHALL NOT BE ENTITLED TO ANY ALLOWANCE OR CLAIM WITH RESPECT TO SUCH PRODUCT. THE BUYER AGREES THAT NO OTHER REMEDY (INCLUDING, BUT NOT LIMITED TO, INCIDENTAL OR CONSEQUENTIAL DAMAGES FOR LOST PROFITS, LOST SALES, INJURY TO PERSON OR PROPERTY OR ANY OTHER INCIDENTAL OR CONSEQUENTIAL LOSSES) SHALL BE AVAILABLE TO THE BUYER.

PROPRIETARY INFORMATION

PROPRIETARY OF GLOBTEK, INC. ANY REPRODUCTION, DISCLOSURE OR USE OF THIS DRAWING, IN WHOLE OR IN PART, IS HEREBY PROHIBITED EXCEPT AS SPECIFIED IN WRITING BY GLOBTEK, INC. © GlobTek, Inc. 2018 - 2025

guest / 05/14/2025 11:48:39 AM GMT CLONED FROM TR9WG1200T00-IMR6B

2. EXCEPT FOR THE FOREGOING EXPRESS LIMITED WARRANTY, GLOBTEK MAKES NO WARRANTY, EXPRESS OR IMPLIED, INCLUDING, BUT NOT LIMITED TO, THE WARRANTIES OF MERCHANTABILITY AND FITNESS FOR A PARTICULAR PURPOSE, ALL OF WHICH IMPLIED WARRANTIES ARE HEREBY SPECIFICALLY DISCLAIMED.

PROPRIETARY INFORMATION

PROPRIETARY OF GLOBTEK, INC. ANY REPRODUCTION, DISCLOSURE OR USE OF THIS DRAWING, IN WHOLE OR IN PART, IS HEREBY PROHIBITED EXCEPT AS SPECIFIED IN WRITING BY GLOBTEK, INC. © GlobTek, Inc. 2018 - 2025

guest / 05/14/2025 11:48:39 AM GMT CLONED FROM TR9WG1200T00-IMR6B