SIPSMT15-05 SERIES

15 AMP
POL CONVERTERS

E176177

FEATURES

* Non-Isolated POL Converter
* SIP / SMT Converter
* Output Current 15AMP
* Input Voltage Range 3-5.5VDC
* Output Voltage Range 0.9-3.63VDC
* 300KHz Switching Frequency
* High Efficiency to 94%
* Over Temperature Protection
* Continuous Short Circuit Protection
* Remote On/Off Control
* UL/C-UL60950 Certified
* Safety Meets IEC/EN/UL 62368-1

MODEL NUMBER	INPUT VOLTAGE	OUTPUT VOLTAGE	OUTPUT CURRENT	INPUT CURRENT		Efficiency (%)
				NO LOAD	FULL LOAD	
SIP15-05S33A SMT15-05S33A	3.0 – 5.5 VDC	1.0 VDC	15 A	60 mA	3.658 A	82
		1.2 VDC	15 A	60 mA	4.286 A	84
		1.5 VDC	15 A	60 mA	5.172 A	87
		1.8 VDC	15 A	70 mA	6.136 A	88
		2.0 VDC	15 A	70 mA	6.742 A	89
		2.5 VDC	15 A	70 mA	8.152 A	92
	4.5 – 5.5 VDC	3.3 VDC	15 A	70 mA	10.532 A	94

NOTE: Nominal Input Voltage 5VDC

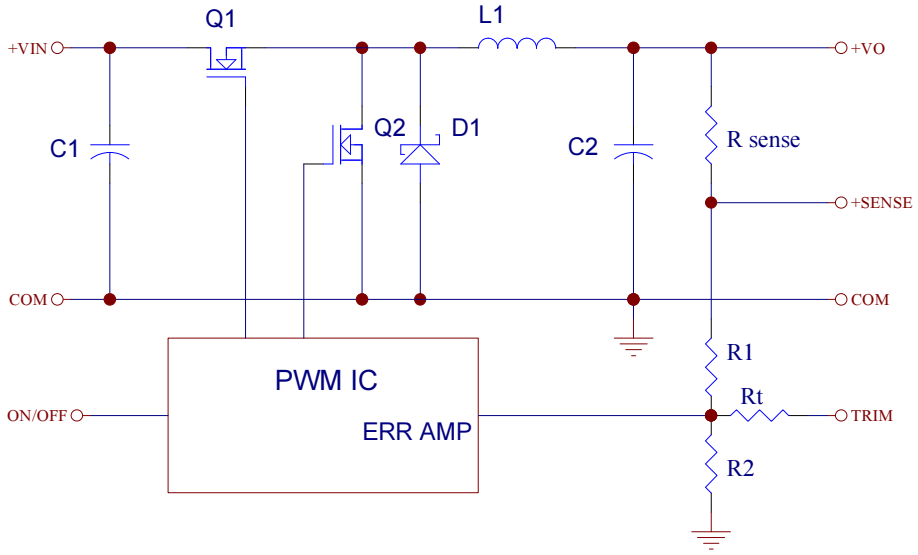

Vo,set (V)	Rtrim (KΩ)
0.90	135.36
1.00	79.17
1.20	41.71
1.50	22.98
1.80	14.96
2.00	11.75
2.50	6.93
3.30	3.15
3.63	2.20

Table 1. External Resistor Values for programming output voltage

Figure 1. Simplified Schematic

SPECIFICATIONS

All Specifications Typical at Nominal Line, Full Load, and 25℃ Unless Otherwise Noted

INPUT SPECIFICATIONS:

Input Voltage Range ..... Vo, set≦Vin-0.5VDC...5V ..... 3.0 – 5.5V
Under Voltage Lock-out ..... power up ..... 2.8V typ.
power down ..... 2.7V typ.
Input Filter Type ..... Capacitive
Positive Remote On/Off Control:
Module On ..... Open Circuit or = Vin
Module Off ..... 0 to <0.4Vdc

OUTPUT SPECIFICATIONS:

Voltage Accuracy ..... ±1.5% max.
Transient Response: 25% Step Load Change ..... <200us
Ripple and Noise, 20MHz BW (note3) ..... 20mVrms max.
50mVpk-pk max.
Temperature Coefficient ..... ±0.03%/C max.
Short Circuit Protection ..... Continuous
Line Regulation (note1) ..... SIP15-05S33A ..... ±0.2% max.
SMT15-05S33A ..... ±0.4% max.
Load Regulation (note2) ..... ±0.5% max.
Capacitive Load Low ESR ..... 10000uF max.
External Trim Adj. Range (See Table1) ..... Vo=0.9 – 3.63Vdc
Start up Time ..... 4.5ms typ.

GENERAL SPECIFICATIONS:

Efficiency ..... See Table
Isolation Voltage ..... Non-Isolation
Switching Frequency ..... 300KHz typ.
Over Temperature Protection ..... 120℃ typ.
Operating Ambient Temperature Range ..... -40℃ to +85℃
Power De-rating Curve ..... See Figure2, 3
Storage Temperature Range ..... -55℃ to +125℃
MTBF ..... MIL-HDBK-217F, GB, 25℃, Full Load ..... 1.5Mhrs typ.
Dimensions: SIP Package: 2.00x0.327x0.52 inches (50.8x8.3x13.2 mm)
SMT Package: 1.30x0.53x0.366 inches (33.0x13.46x9.30 mm)
Structure ..... Non-Potted with Open Frame Type
Weight 6.8g

NOTE:

1. Measured from high line to low line, Vo, set=1.8Vdc.
2. Measured from full load to zero load, Vo, set=3.3Vdc.
3. The output noise is measured with 10uf tantalum capacitor and 1uf ceramic capacitor across output.
4. The Input terminal recommend to parallel with 100uF capacitor ESR<20mΩ to reduce the input ripple voltage.
5. Suffix "N" to the model number with negative logic remote on/off
   Model on ..... Open Circuit or 0 to < 0.4VDC
   Module off ..... >+2.8VDC to Vin

Dimensions:

SIP Packages

Mechanical Specification
All Dimensions In Inches (mm)
Tolerances Inches: X.XX= ±0.02 , X.XXX= ±0.010
Millimeters: X.X= ±0.5 , X.XX=±0.25

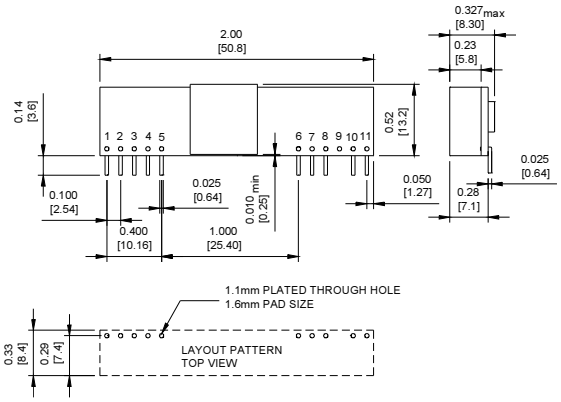

PIN CONNECTION	
Pin	FUNCTION
1	+Output
2	+Output
3	+Sense
4	+Output
5	Common
6	Common
7	+V Input
8	+V Input
9	No Pin
10	Trim
11	On/Off Control

SMT Packages

Bottom View of Board

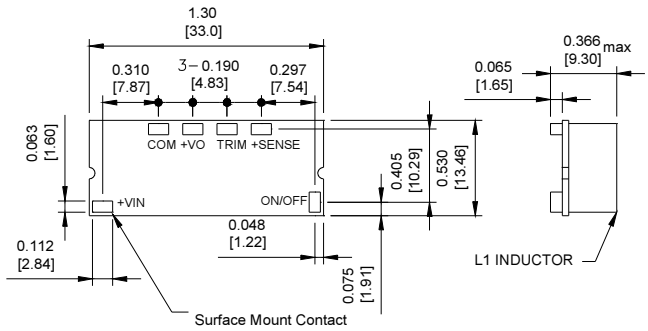

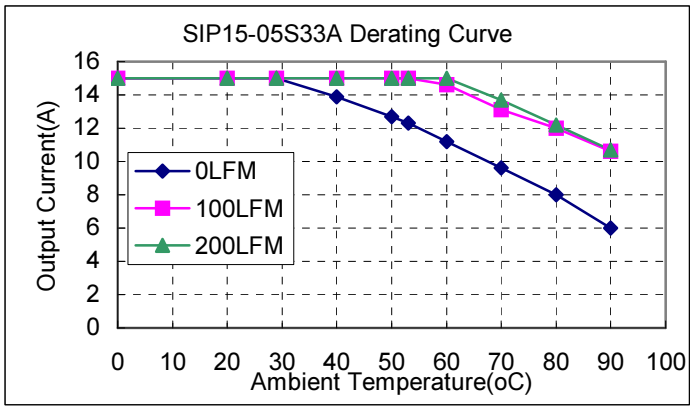

Figure2. Typical Power De-rating for 5Vin

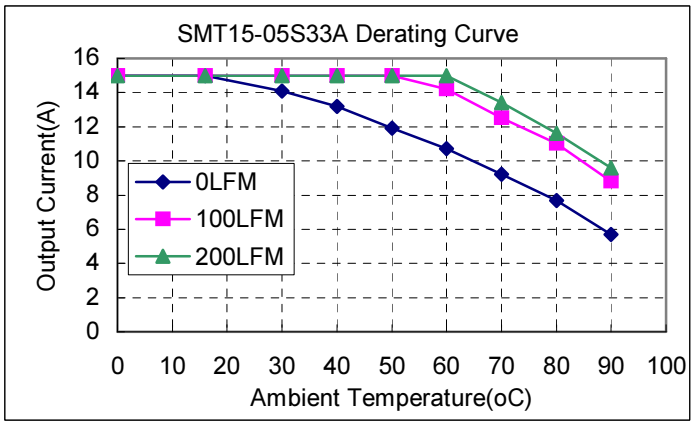

Figure3. Typical Power De-rating for 5Vin