REVISIONS			
REV.	ECN No	DESCRIPTION	DATE
D1		INITIAL CONCEPT. P.SUTTON	21 FEB'2017

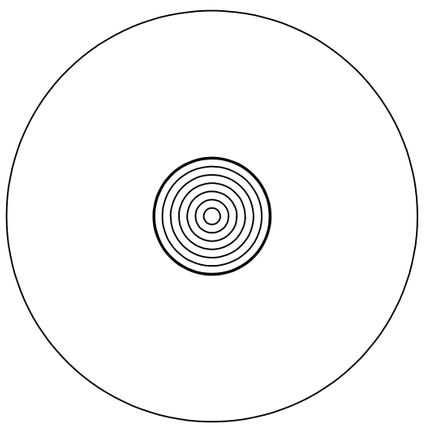

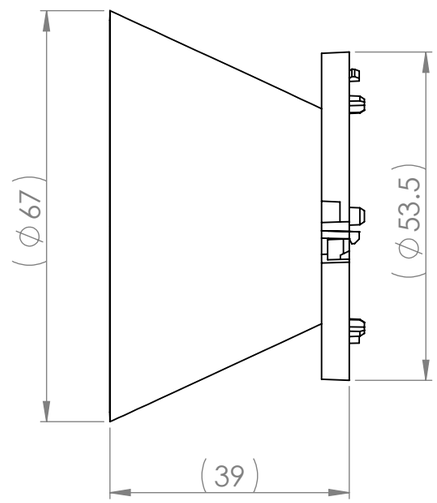

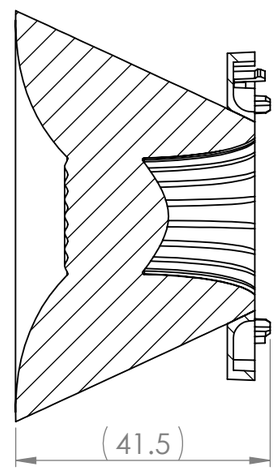

SECTION B-B

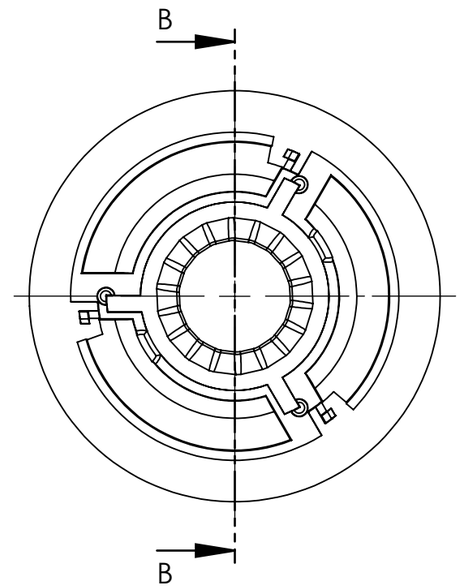

NOTES:

1 - MATERIALS:
HOLDER - GLASS FILLED NYLON
OPTIC - SILICONE

2 - FINISH:
ALL OPTIC SURFACES ARE OPTICALLY POLISHED.

5 - AUXILLIARY DIMENSIONS ARE FOR INFORMATION ONLY
AND MUIST NOT TO BE USED FOR INSPECTION

CUSTOMER DRAWING

SHEET 2 OF 2

carclo Optics
Unit 6-7 Faraday Road
Rabans Lane Industrial Area,
Aylesbury, HP19 8RY, UK.
Tel: +44(0) 01753 575 011
sales@carclo-optics.com www.carclo-optics.com

Title	OVERMOULDED SILICONE OPTIC - ULTRA NARROW BEAM ON FORTIMO HOLDER				
Drawn by	P.SUTTON	Customer	CARCLO STANDARD PART	Scale	1:1
THIRD ANGLE PROJECTION	GENERAL TOLERANCES UNLESS OTHERWISE STATED DIN16742:TG5	CARCLO Optics CONFIDENTIAL: UNAUTHORISED COPYING, DISCUSSION & DISTRIBUTION PROHIBITED	DIMENSION IN mm	Format Size	A3
			CAD File	60028_Rev-D1_Fortimo_UNB	
			Part N° 60028	Project N°	00296