the photoelectric specialist

MINI-BEAM Universal Voltage Series

Universal voltage photoelectric sensors with electromechanical relay output

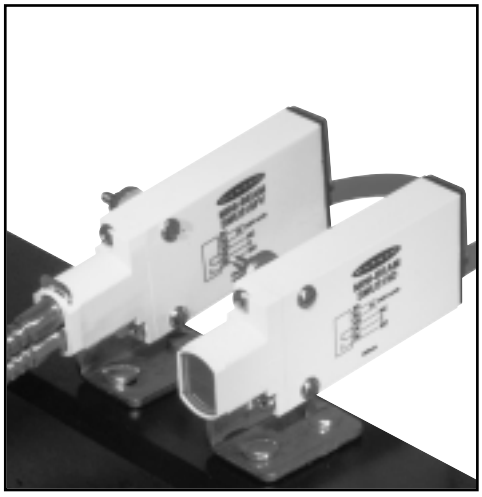

*U.S. Patent no. 4356393

MINI-BEAM Universal Voltage Series Features

- Popular, compact MINI-BEAM package
- Universal supply voltage: 24 to 240V ac, 50/60 Hz; 24 to 240V dc (1.5 watts or 2.5VA maximum)
- Easy-to-operate sensors with few necessary adjustments
- Light/Dark Operate select switch and 15-turn Gain potentiometer are protected by a gasketed clear acrylic cover
- Multiple sensing modes include: Opposed, Retroreflective, Diffuse, Divergent and Convergent, plus Glass and Plastic Fiber Optic models
- 3-amp SPDT (Single-Pole-Double-Throw) electromechanical relay output
- Exclusive, patented Alignment Indicating Device system (AID™*) lights a rear-panel-mounted LED indicator whenever the sensor sees a light condition; superimposed pulse rate indicates received light signal strength
- Wide array of mounting options, including 18 mm in-line thread
- Integral, unterminated cables 2 m (6.5') or 9 m (30') long available

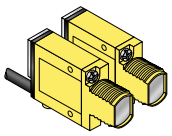

Their small effective beam size is ideal for accuracy-dependent applications, particularly when used with an aperture (see page 10). They have the power to burn through dust and dirt, and may even sense opaque materials through a thin-walled container.

Infrared, 880 nm

MINI-BEAM Universal Voltage Series Opposed-Mode Emitters (E) and Receivers (R)

Models	Range	Cable*	Supply Voltage	Output Type	Excess Gain	Beam Pattern
SMU31E **SMU31R**	3 m (10')	E: 2-wire 2 m (6.5') R: 5-wire 2 m (6.5')	Universal 24 to 240V dc or 24 to 240V ac	SPDT Electro-mechanical Relay	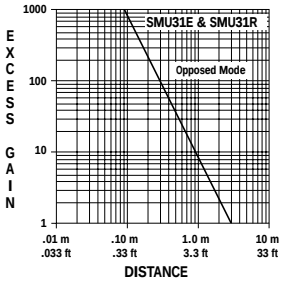	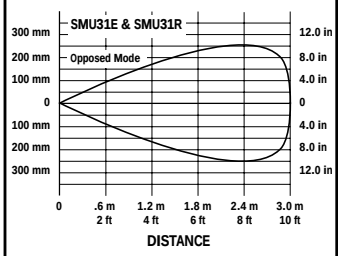
SMU31EL **SMU31RL**	30 m (100')	E: 2-wire 2 m (6.5') R: 5-wire 2 m (6.5')	Universal 24 to 240V dc or 24 to 240V ac	SPDT Electro-mechanical Relay	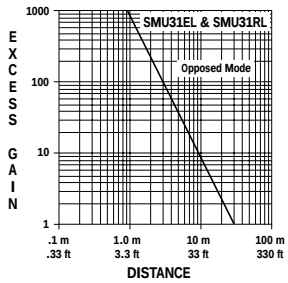	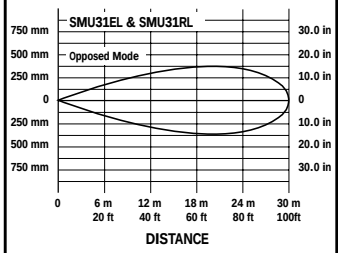

*9 m (30') cables are available by adding the suffix "W/30" to the model number of any cabled sensor (**e.g., SMU31E W/30**).

IMPORTANT: SEE SAFETY WARNING ON BACK PAGE

MINI-BEAM Universal Voltage Series

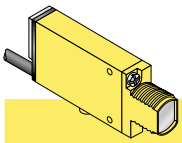

Excellent for sensing even small items where sensing is possible from one side only. Recommended for relatively clean environments where high excess gain is not required.

Non-polarized *Polarized*

Visible red, 650 nm

MINI-BEAM Universal Voltage Series Retroreflective-Mode Sensors

Models	Range**	Cable*	Supply Voltage	Output Type	Excess Gain	Beam Pattern
Non-Polarized						
SMU315LV	5 m (15')	5-wire 2 m (6.5')	Universal 24 to 240V dc or 24 to 240V ac	SPDT Electro-mechanical Relay	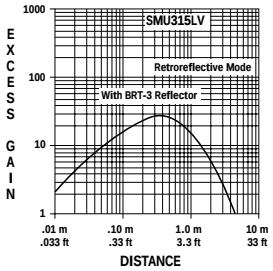	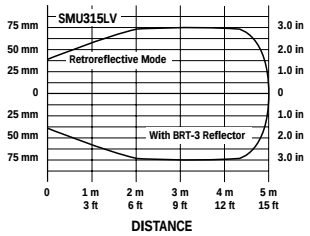
Polarized Extended Range						
SMU315LP	10 mm to 3 m (0.4" to 10')	5-wire 2 m (6.5')	Universal 24 to 240V dc or 24 to 240V ac	SPDT Electro-mechanical Relay	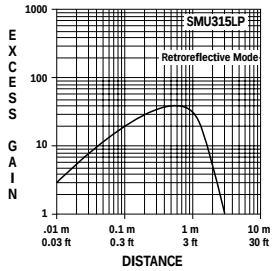	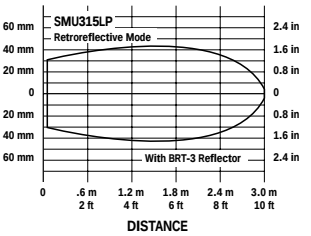

* 9 m (30') cables are available by adding suffix "**W/30**" to the model number of any cabled sensor (e.g., **SMU315LV W/30**)

** Retroreflective range is specified using one model BRT-3 retroreflector (3" diameter). Actual sensing range may be more or less than specified, depending upon the efficiency and reflective area of the retroreflector(s) used. See page 9 and your current Banner Photoelectric Sensors catalog for more information about retroreflective targets.

Banner Engineering Corp. • Minneapolis, U.S.A.
Website: http://www.baneng.com • Tel: 888.373.6767

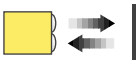

Infrared, 880 nm

These economical single-unit sensors are excellent for sensing objects of adequate size and reflectivity at short range. Divergent models are useful for sensing small items and translucent or transparent materials at close range.

D Models *W Models*

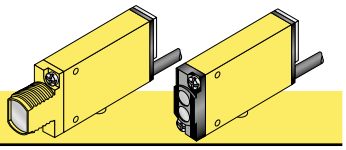

MINI-BEAM Universal Voltage Series Diffuse-Mode Sensors

Models	Range	Cable*	Supply Voltage	Output Type	Excess Gain	Beam Pattern
					Performance based on 90% reflectance white test card	
SMU315D	380 mm (15")	5-wire 2 m (6.5')	Universal 24 to 240V dc or 24 to 240V ac	SPDT Electro-mechanical Relay	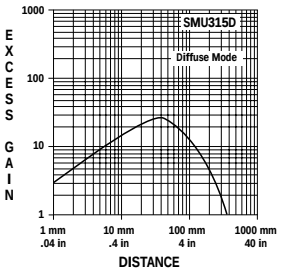	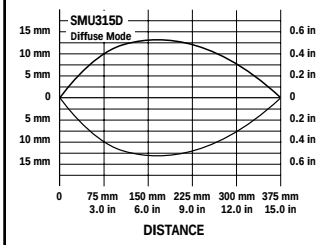
Divergent Diffuse						
SMU315W	130 mm (5")	5-wire 2 m (6.5')	Universal 24 to 240V dc or 24 to 240V ac	SPDT Electro-mechanical Relay	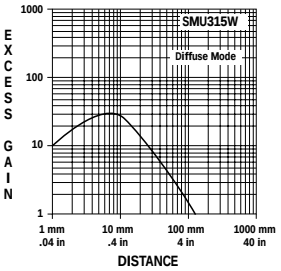	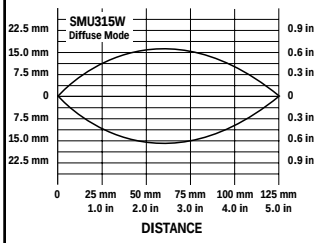

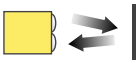

Visible red, 650 nm

Convergent-mode sensors feature high excess gain and can detect objects with low reflectivity. They are a good choice for counting adjacent radiused objects and for accurate position sensing.

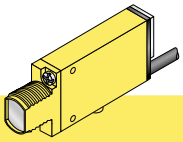

MINI-BEAM Universal Voltage Series Convergent-Mode Sensors

Models	Focus	Cable*	Supply Voltage	Output Type	Excess Gain	Beam Pattern
					Performance based on 90% reflectance white test card	
Visible Red 650 nm						
SMU315CV	16 mm (0.65") **Spot Size at Focus:** 1.3 mm (0.05")	5-wire 2 m (6.5')	Universal 24 to 240V dc or 24 to 240V ac	SPDT Electro-mechanical Relay	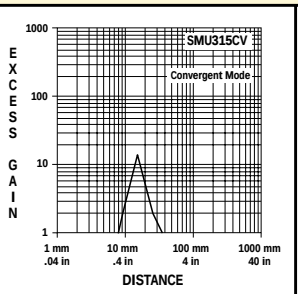	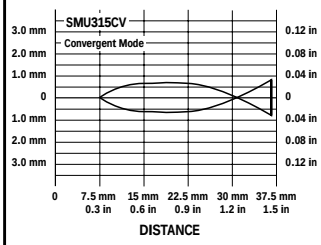
SMU315CV2	43 mm (1.7") **Spot Size at Focus:** 3.0 mm (0.12")	5-wire 2 m (6.5')	Universal 24 to 240V dc or 24 to 240V ac	SPDT Electro-mechanical Relay	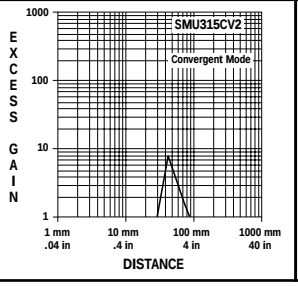	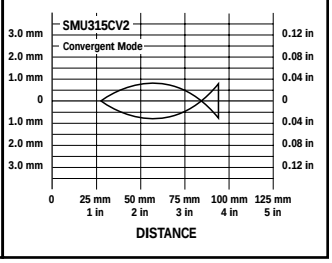

* 9 m (30') cables are available by adding suffix **"W/30"** to the model number of any cabled sensor (e.g., **SMU315CV W/30**)

MINI-BEAM Universal Voltage Series

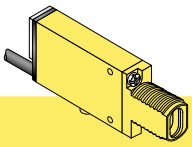

An excellent option for sensing in tight or inaccessible areas. Fibers withstand vibration and shock; are immune to electrical noise. Glass fibers withstand high temperatures, extreme moisture and corrosive materials. Not recommended for applications requiring bending or repeated flexing of fibers (see plastic fiber models).

Infrared, 880 nm
Visible red, 650 nm

MINI-BEAM Universal Voltage Series Glass Fiber Optic Sensors

Models	Range	Cable*	Supply Voltage	Output Type	Excess Gain	Beam Pattern
					Diffuse mode performance based on 90% reflectance white test card	
Infrared 880 nm					OPPOSED MODE – INDIVIDUAL FIBERS	
SMU315F	Range varies by sensing mode and fiber optics used	5-wire 2 m (6.5')	Universal 24 to 240V dc or 24 to 240V ac	SPDT Electro-mechanical Relay	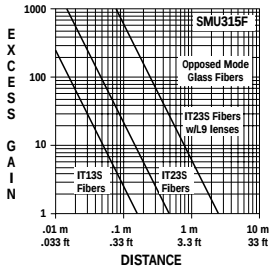	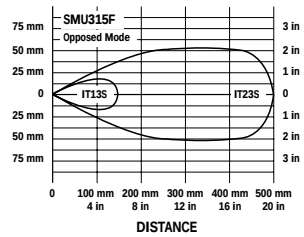
					DIFFUSE MODE – BIFURCATED FIBERS	
					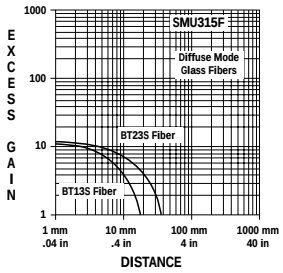	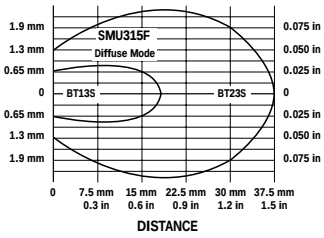
Visible Red 650 nm					OPPOSED MODE – INDIVIDUAL FIBERS	
SMU315FV	Range varies by sensing mode and fiber optics used	5-wire 2 m (6.5')	Universal 24 to 240V dc or 24 to 240V ac	SPDT Electro-mechanical Relay	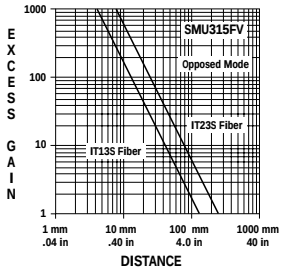	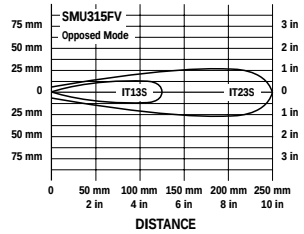
					DIFFUSE MODE – BIFURCATED FIBERS	
					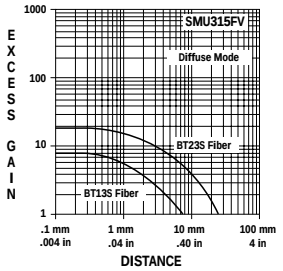	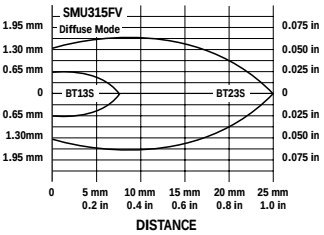

* 9 m (30') cables are available by adding suffix **"W/30"** to the model number of any cabled sensor (e.g., **SMU315FV W/30**)

Banner Engineering Corp. • Minneapolis, U.S.A.
Website: http://www.baneng.com • Tel: 888.373.6767

Visible red, 650 nm

An excellent option for sensing in tight or inaccessible areas. Fibers withstand vibration and shock; are immune to electrical noise. Plastic fibers function well at temperatures between -30º and +70ºC (-20º to +158ºF), and stand up to repeated flexing. Most are easy to shorten in the field, for custom installations. Not recommended for severe environments (see glass fiber models).

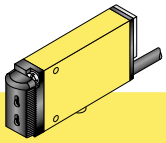

MINI-BEAM Universal Voltage Series Plastic Fiber Optic Sensors

Models	Range	Cable*	Supply Voltage	Output Type	Excess Gain	Beam Pattern
					Diffuse mode performance based on 90% reflectance white test card	
Visible Red 650 nm					OPPOSED MODE – INDIVIDUAL FIBERS	
SMU315FP	Range varies by sensing mode and fiber optics used	5-wire 2 m (6.5')	Universal 24 to 240V dc or 24 to 240V ac	SPDT Electro-mechanical Relay	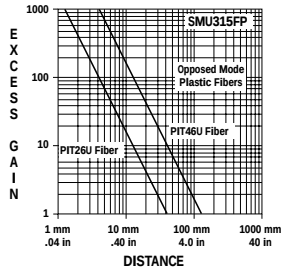	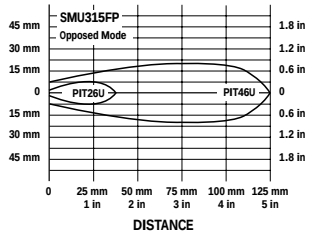
					DIFFUSE MODE – BIFURCATED FIBERS	
					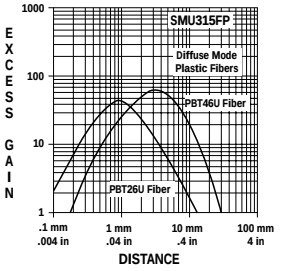	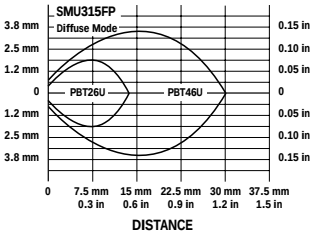

* 9 m (30') cables are available by adding suffix **"W/30"** to the model number of any cabled sensor (e.g., **SMU315FP W/30**)

MINI-BEAM Universal Voltage Series Specifications

Supply Voltage and Current	**Universal voltage:** 24 to 240V ac, 50/60Hz or 24 to 240V dc (1.5 watts or 2.5 VA maximum)
Supply Protection Circuitry	Protected against transient voltages. DC hookup is without regard to polarity.
Output Configuration	SPDT (Single-Pole, Double Throw) (form C) electromechanical relay, ON/OFF output.
Output Rating	**Maximum switching power (resistive load):** 90W, 250VA **Maximum switching voltage (resistive load):** 250V ac or 30V dc **Maximum switching current (resistive load):** 3A **Minimum voltage and current:** 5V dc, 10 mA **Mechanical life:** 20,000,000 operations **Electrical life at full resistive load:** 100,000 operations
Output Protection Circuitry	Protected against false pulse on power-up.
Output Response Time	**Closure time:** 20 milliseconds max. **Release time:** 20 milliseconds max. **Maximum switching speed:** 25 operations per second
Repeatability	**All sensing modes:** 1 millisecond
Adjustments	Light/Dark Operate select switch, and 15-turn slotted brass screw Gain (sensitivity) adjustment potentiometer (clutched at both ends of travel). Both controls are located on rear panel of sensor and are protected by a gasketed, clear acrylic cover.
Indicators	Exclusive, patented Alignment Indicator Device system (AID™, US patent #4356393) lights a rear-panel-mounted LED indicator whenever the sensor sees a “light” condition, with a superimposed pulse rate proportional to the light signal strength (the stronger the signal, the faster the pulse rate).
Construction	Reinforced thermoplastic polyester housing, totally encapsulated, o-ring seal, acrylic lenses, and stainless steel screws.
Environmental Rating	Meets NEMA standards 1, 2, 3, 3S, 4, 4X, 12, and 13; IEC IP67.
Connections	PVC-jacketed 5-conductor (2-conductor for emitters) 2 m (6.5') or 9 m (30') unterminated cable.
Operating Conditions	**Temperature:** -20° to +55°C (-4° to +131°F) **Maximum relative humidity:** 90% at 50°C (non-condensing)
Application Notes	Install transient suppressor (MOV) across contacts switching inductive loads.

Banner Engineering Corp. • Minneapolis, U.S.A.
Website: http://www.baneng.com • Tel: 888.373.6767

MINI-BEAM Universal Voltage Series Dimensions

Opposed, Retroreflective, Diffuse, and Convergent Modes (models with suffix E, EL, R, RL, LP, LV, D, CV, CV2)

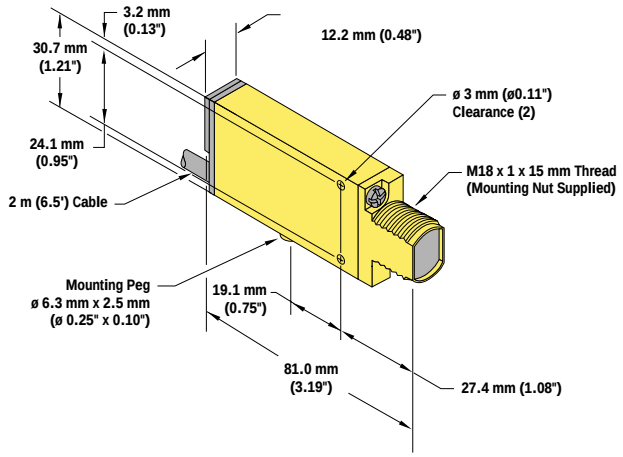

Divergent Diffuse Mode (models with suffix W)

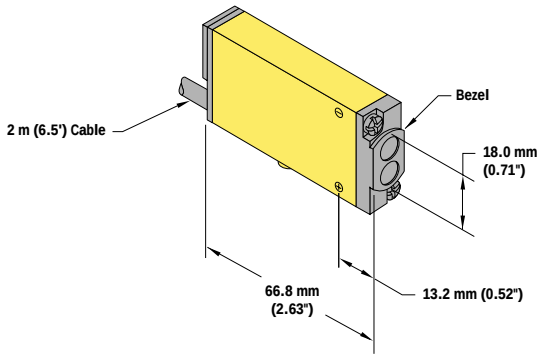

Glass Fiber Optic (models with suffix F and FV)

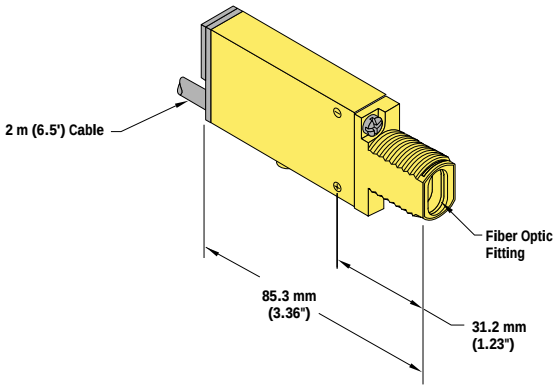

Plastic Fiber Optic (models with suffix FP)

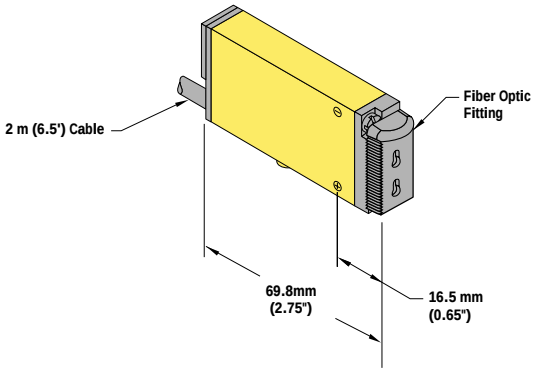

MINI-BEAM Universal Voltage Series Hookups

All Models Except Emitters

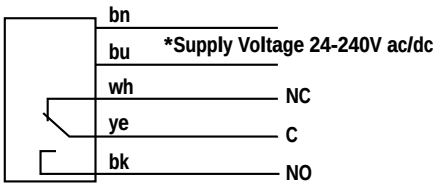

***Connection of dc power is without regard to polarity**

NOTE: Install transient suppressor (MOV) across contacts switching inductive loads.

Emitters

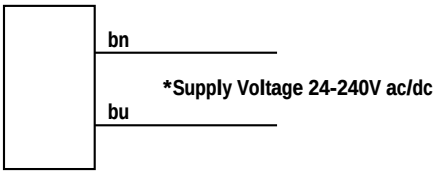

Using the MINI-BEAM Universal Voltage Sensor

Installation and Alignment

Proper operation of these sensors requires that they be mounted securely and aligned properly. Excessive sensor movement or vibration (or movement or vibration of the fiber tips, in the case of fiber-optic sensors) can result in loss of alignment to the target object, eventually leading to intermittent or false operation. Banner offers a complete selection of mounting brackets (see page 9-10); contact the factory for additional mounting suggestions.

Normal Operation

MINI-BEAM Universal Voltage sensors (except opposed-mode emitters) have two adjustments: Gain and Light/Dark Operate, plus a Signal Strength indicator LED on the back of the sensor, protected behind a clear acrylic cover (see Figure 1).

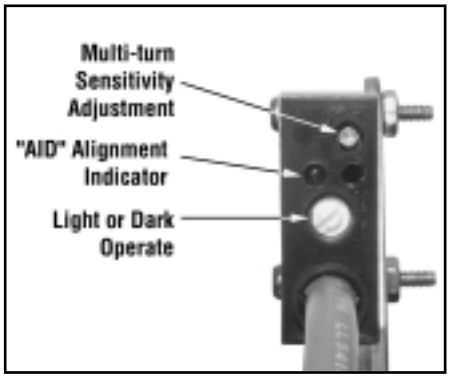

Figure 1. MINI-BEAM Universal Voltage Series indicators

Gain
To increase Gain, turn the 15-turn potentiometer clockwise. It is clutched at both ends of travel to avoid damage. A “clicking” sound may be heard and/or felt when attempting to adjust beyond either limit.

Signal Strength Indicator LED
The Signal Strength indicator is Banner’s exclusive, patented AID (Alignment Indicating Device). Its pulse rate increases as the received light signal strength increases. This simplifies accurate alignment and gives a relative indication of sensing contrast.

Light/Dark Operate Select
In Light Operate mode, the sensor output relay energizes when the lighter of the two conditions is present; in Dark Operate mode, the relay energizes when the darker of the two conditions is present.

To select Light Operate, insert a small screwdriver into the slot on the select switch and turn it fully clockwise, until the tabs on the control touch the stop; to select Dark Operate, turn the select switch fully counterclockwise, until the tabs touch the opposite side of the stop.

NOTE: Take care when turning the Light/Dark Operate select switch, that the small tabs on the switch do not become damaged.

Troubleshooting

MINI-BEAM Universal Voltage Series sensors have no field-serviceable parts, other than replaceable lenses (see page 9).

Banner Engineering Corp. • Minneapolis, U.S.A.
Website: http://www.baneng.com • Tel: 888.373.6767

Accessories

Retroreflective Targets

Banner offers a wide selection of high-quality retroreflective targets. See the Accessories section of your current Banner Photoelectric Sensors catalog for complete information.

NOTE: Polarized sensors require corner cube type retroreflective targets only.

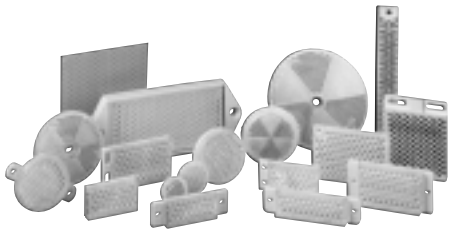

Replacement Lens Assemblies

MINI-BEAM lens assemblies are field-replaceable. In addition, some lenses may be used to convert from one sensing mode to another, or to change the sensing range of a particular sensor. The possible conversions are listed in the table below.

Model	Description	Possible Sensing Mode or Range Changes
UC-300BZ	Replacement lens for W	—
UC-300C.7	Replacement lens for CV	Change CV2 to CV
UC-300C2	Replacement lens for CV2	Change CV to CV2
UC-300E	Replacement lens for E and R	—
UC-300EL	Replacement lens for EL and RL	Extend range of E and R
UC-300F	Replacement lens for F and FV	Change D to F
UC-300FP	Replacement lens for FP (old style)	—
UC-300FP2	Replacement lens for FP (current style)	—
UC-300L	Replacement lens for LV and D	Change F to D
UC-300LP	Replacement lens for LP	—

Apertures

Opposed-mode MINI-BEAM sensors may be fitted with apertures which narrow or shape the effective beam of the sensor to more closely match the size or profile of the object to be sensed, for example, the use of "line" (or "slit") apertures for sensing wire or thread. Each model contains 20 apertures.

Model	Description
AP31-020	0.5 mm (0.02") diameter, circular
AP31-040	1.0 mm (0.04") diameter, circular
AP31-100	2.5 mm (0.10") diameter, circular
AP31-020H	0.5 x 6.4 mm (0.02" x 0.25"), horizontal slotted
AP31-040H	1.0 x 6.4 mm (0.04" x 0.25"), horizontal slotted
AP31-100H	2.5 x 6.4 mm (0.10" x 0.25"), horizontal slotted
AP31-200H	5.1 x 6.4 mm (0.20" x 0.25"), horizontal slotted
AP31-020V	0.5 x 12.7 mm (0.02" x 0.50"), vertical slotted
AP31-040V	1.0 x 12.7 mm (0.04" x 0.50"), vertical slotted
AP31-100V	2.5 x 12.7 mm (0.10" x 0.50"), vertical slotted
AP31-200V	5.1 x 12.7 mm (0.20" x 0.50"), vertical slotted
AP31-DVHX2	Kit containing two of each aperture

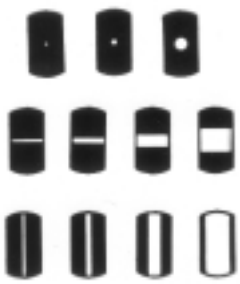

Range of MINI-BEAM Opposed-Mode Sensor Pairs when Used with Apertures

Definitions

GROUP I Emitter/ Receiver Pairs (see RANGE columns at right):
SMU31E/SMU31R

GROUP II Emitter/ Receiver Pairs (see RANGE columns at right):
SMU31EL/SMU31RL

Example:
The MINI-BEAM SMU1E/ SMU31R sensor pair is in **Group I**. With an **AP31-040 circular** aperture on the *receiver only*, range is 940 mm (37"). With AP31-040 apertures on *both emitter and receiver*, range is 330 mm (13"). Group I range with AP31-040 apertures and UC-300EL upper covers on both units is 483 mm (19"); range with receiver aperture only is 2.0 m (80").

Aperture(s) Used	RANGE Standard Group I and II Sensor Pairs				RANGE Group I Sensor Pairs with UC-300EL Upper Covers Substituted	
	Emitter & Receiver Both Apertured		Receiver Only Apertured			
	Group I Sensors	Group II Sensors	Group I Sensors	Group II Sensors	Emitter & Receiver Both Apertured	Receiver Only Apertured
AP31-020	89 mm (3.5")	102 mm (4.0")	457 mm (18")	1.5 m (60")	127 mm (5.0")	914 mm (36")
AP31-040	330 mm (13 ")	457 mm (18")	940 mm (37")	3.2 m (10.5')	483 mm (19")	2.0 m (80")
AP31-100	1.5 m (60")	3.0 m (10')	2.5 m (100")	8.2 m (27')	2.1 m (84")	5.8 m (19')
AP31-020H	406 mm (16")	1.8 m (70")	965 mm (38")	9.1 m (30')	864 mm (34")	3.4 m (11')
AP31-040H	914 mm (36")	4.0 m (13')	1.8 m (72")	12.5 m (41')	1.8 m (72")	5.2 m (17')
AP31-100H	2.3 m (90")	10.4 m (34')	2.9 m (114")	20.7 m (68')	5.2 m (17')	8.5 m (28')
AP31-200H	2.8 m (110")	21.3 m (70')	3.0 m (120")	24.4 m (80')	8.2 m (27')	11.0 m (36')
AP31-020V	457 mm (18")	1.7 m (65")	1.0 m (40")	8.2 m (27')	1.0 m (40")	3.4 m (11')
AP31-040V	1.0 m (40")	5.5 m (18')	1.8 m (70")	15.8 m (52')	2.1 m (84")	5.5 m (18')
AP31-100V	2.3 m (90")	10.7 m (35')	2.9 m (114")	22.9 m (75')	6.1 m (20')	8.5 m (28')
AP31-200V	2.8 m (110")	22.9 m (75')	3.0 m (120")	25.9 m (85')	8.5 mm (28')	11.0 m (36')

Banner Engineering Corp. • Minneapolis, U.S.A.
Website: http://www.baneng.com • Tel: 888.373.6767

MINI-BEAM Mounting Brackets

SMB312S	• Stainless steel 2-axis, side mounting bracket

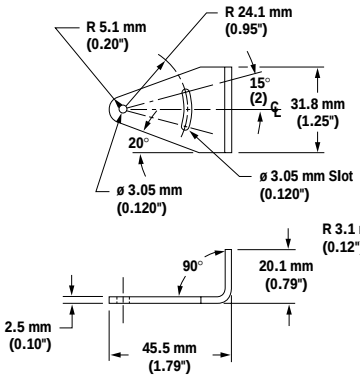

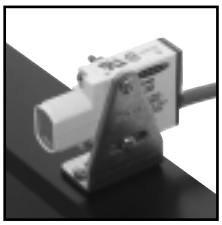

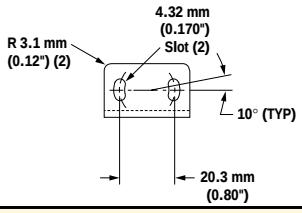

SMB312PD	• Stainless steel 18 mm barrel mounting bracket

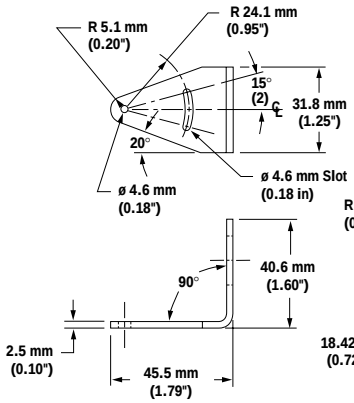

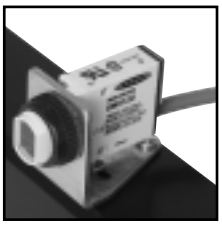

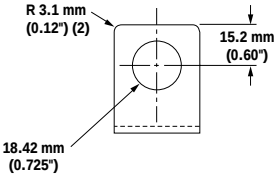

SMB312B	• Stainless steel 2-axis, bottom mounting bracket • Includes mounting foot

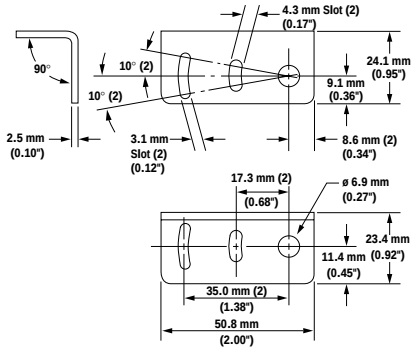

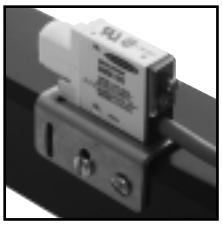

SMB46L	• "L" bracket • 14 ga 316 stainless steel

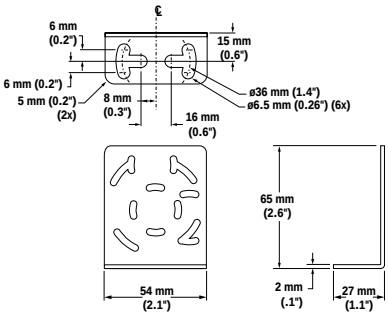

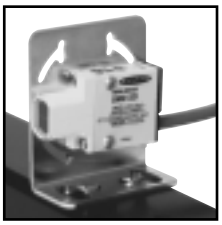

SMB46S	• "S" bracket • 14 ga 316 stainless steel

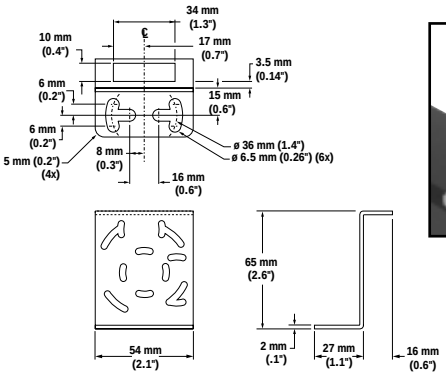

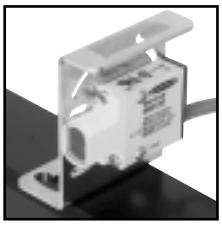

SMB46U	• "U" bracket • 14 ga 316 stainless steel

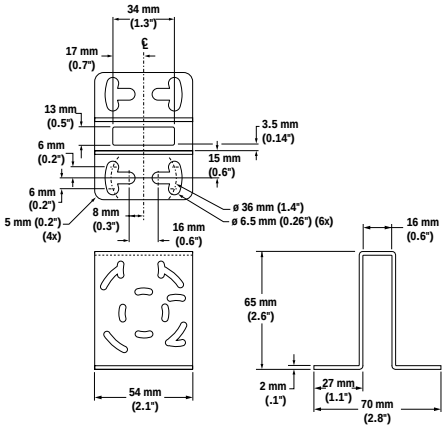

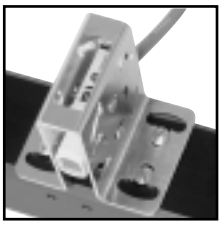

MINI-BEAM Universal Voltage Series

MINI-BEAM Mounting Brackets

SMB18C	• 18 mm split clamp black thermoplastic polyester • Stainless steel mounting hardware included • Not for use with FP Models

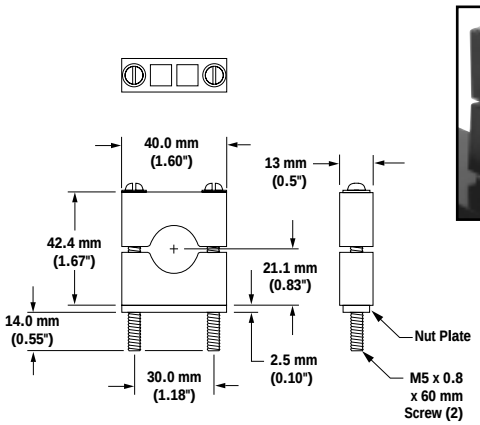

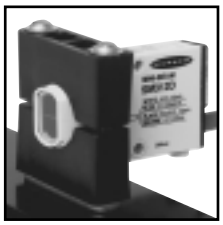

SMB18SF	• 18 mm swivel, black thermoplastic polyester • Stainless steel mounting hardware included • Not for use with FP Models

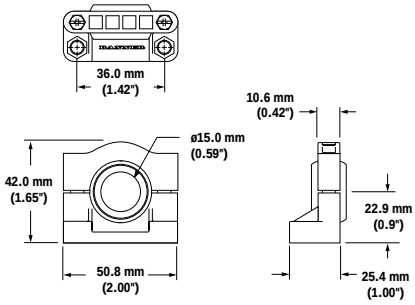

SMB3018SC	• 18 mm swivel barrel or side mount • Black thermoplastic polyester

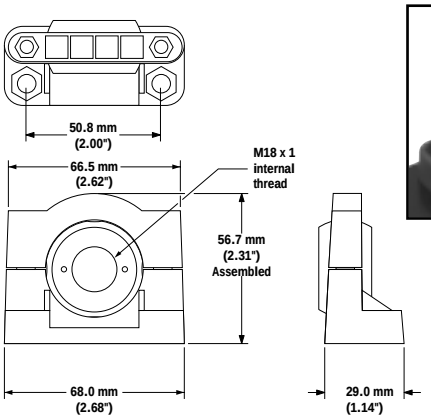

SMB3018SUS	• Side mount swivel bracket – extended range of motion • Black thermoplastic polyester

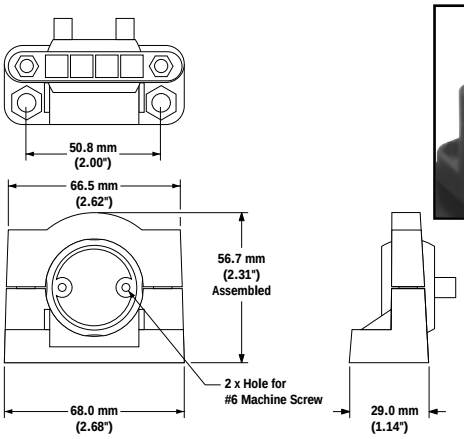

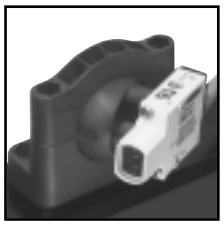

WARRANTY: Banner Engineering Corp. warrants its products to be free from defects for one year. Banner Engineering Corp. will repair or replace, free of charge, any product of its manufacture found to be defective at the time it is returned to the factory during the warranty period. This warranty does not cover damage or liability for the improper application of Banner products. This warranty is in lieu of any other warranty either expressed or implied.

BANNER®
the photoelectric specialist

WARNING . . . Not To Be Used for Personnel Protection

Never use these products as sensing devices for personnel protection. Doing so could lead to serious injury or death.

These sensors do NOT include the self-checking redundant circuitry necessary to allow their use in personnel safety applications. A sensor failure or malfunction can cause either an energized or de-energized sensor output condition. Consult your current Banner Safety Products catalog for safety products which meet OSHA, ANSI and IEC standards for personnel protection.

Banner Engineering Corp., 9714 Tenth Ave. No., Minneapolis, MN 55441 • Phone: 888.373.6767 • http:\\www.baneng.com • Email: sensors@baneng.com