MODEL NO.	"BL"	"TL"	"PL"	"L"	"D"	P/N
BTETA1.54.7S	7.5	1.5	1.00	56	.09	23006
BTETA1.56.7S	7.5	1.5	1.00	80	.09	23007
BTETA1.57S	7.5	1.5	1.00	84	.09	23008
BTETA1.58S	7.5	1.5	1.00	96	.09	23009
BTETA1.53SM600	7.5	1.5	1.00	36	.09	71986
BTETA1.59S	7.5	1.5	1.00	108	.09	22498
BTETA.756S	7.5	1.5	1.00	72	.046	22337
BTETA.754S	7.5	1.5	1.00	48	.046	22017
BTETA1.52S	7.5	1.5	1.00	24	.09	21959
BTETA.753S	7.5	1.5	1.00	36	.046	21794
BTETA16S	7.5	1.5	1.00	72	.06	21763
BTETA13S	7.5	1.5	1.00	36	.06	21762
BTETA1.53S	7.5	1.5	1.00	36	.09	21496

NOTES:

1. 'M600' SUFFIX INDICATES FIBER POTTED ON ANGLED END WITH EPOXY OPERATES IN MAX. TEMPERATURE OF 600°F.

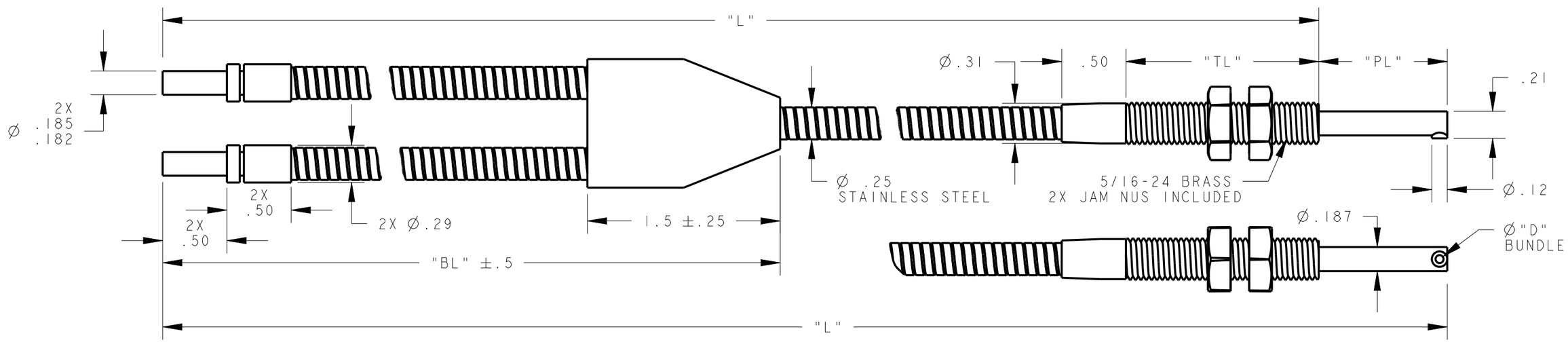

NOTES:
1. ALL DIMENSIONS ARE MILLIMETERS [INCHES] UNLESS OTHERWISE NOTED.

This drawing is the property of BANNER ENGINEERING CORP. and is proprietary in general and in detail. Its contents shall not be revealed to outside parties without written consent of BANNER.

THIRD ANGLE PROJECTION

BANNER ENGINEERING CORP.
P.O. BOX 9414
MINNEAPOLIS, MN 55440

TITLE

BTETA1.5 SERIES SS TERMINATED

SIZE	DRAWING NO.	REV.
B	161937	A

SCALE 5:4 | SHEET 1 OF 2

PRO/E

MODEL NO.	"BL"	"TL"	"PL"	"L"	"D"	P/N
BTETA1.58SM600	7.5	1.5	1.00	96	.09	93883
BTETA1.5.83S	4.5	1.5	1.00	10	.09	24870
BTETA13SM600	7.5	1.5	1.00	36	.06	24871
BTETA1.8S	7.5	1.5	1.00	9	.06	00000
BTETA1.511S	7.5	1.5	1.00	132	.09	68597
BTETA1.525SM600	7.5	1.5	1.00	300	.09	71564
BTETA1.51S	7.5	1.5	1.00	12	.09	79020
BTETA1.525S	7.5	1.5	1.00	300	.09	24592
BTETA1.515S	7.5	1.5	1.00	180	.09	24591
BTETA1.52SM2.5	7.5	1.5	2.50	24	.09	00000
BTETA1.55S	7.5	1.5	1.00	60	.09	24053
BTETA1.51.5S	7.5	1.5	1.00	18	.09	23982
BTETA12S	7.5	1.5	1.00	24	.06	00000
BTETA11S	4.5	1.5	1.00	12	.06	23877
BTETA1.51SM2	4.5	1.5	2.00	12	.09	00000
BTETA14S	7.5	1.5	1.00	48	.06	23363
BTETA1.56S	7.5	1.5	1.00	72	.09	23732
BTETA1.53SMSTMPL	7.5	.75	2.25	36	.09	23161

NOTES:
1. ALL DIMENSIONS ARE MILLIMETERS [INCHES] UNLESS OTHERWISE NOTED.

This drawing is the property of BANNER ENGINEERING CORP. and is proprietary in general and in detail. Its contents shall not be revealed to outside parties without written consent of BANNER.

THIRD ANGLE PROJECTION

BANNER ENGINEERING CORP.
P.O. BOX 9414
MINNEAPOLIS, MN 55440

TITLE

BTETA1.5 SERIES SS TERMINATED

SIZE	DRAWING NO.	REV.
B	161937	A

SCALE 3:2 | SHEET 2 OF 2

PRO/E