MODEL NO.	"L"	P/N
BT66ST5-VL	2000	96023
BT63ST5-VL	1000	96012

NOTES:

2. OPERATING TEMPERATURE AT TIP -140°C ~ +249°C.
3. MINIMUM BEND RADIUS R25.

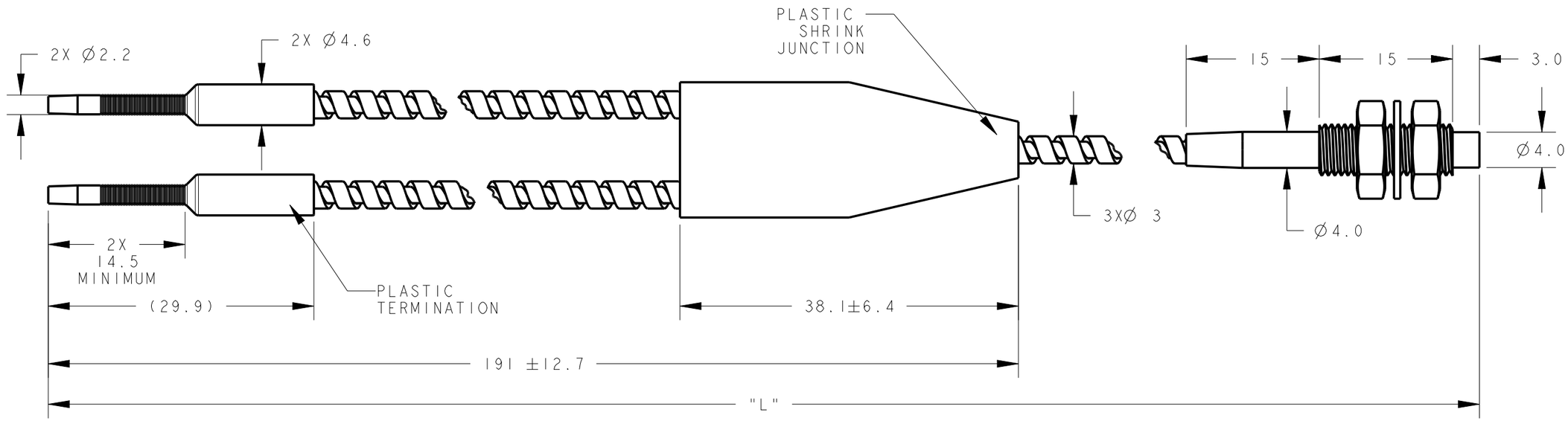

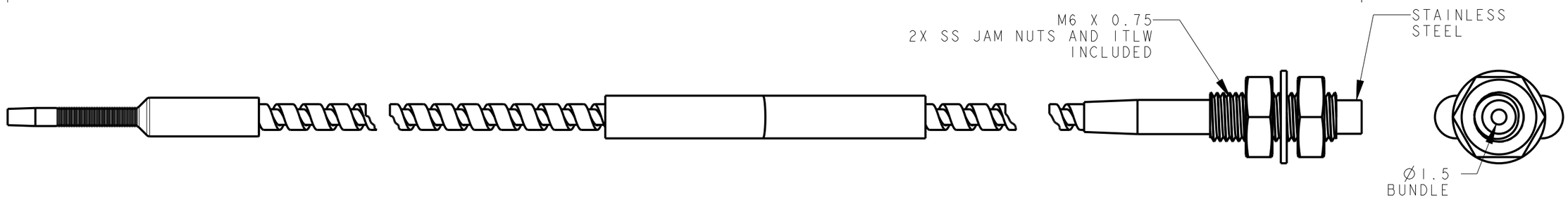

NOTES:
1. ALL DIMENSIONS ARE MILLIMETERS [INCHES] UNLESS OTHERWISE NOTED.
2. REFER TO "www.bannerengineering.com" FOR ADDITIONAL DATA AND SPECIFICATIONS.

This drawing is the property of BANNER ENGINEERING CORP. Any use or reproduction, in any form, without prior written permission of Banner is prohibited.
© 2015 Banner Engineering Corp.

THIRD ANGLE PROJECTION

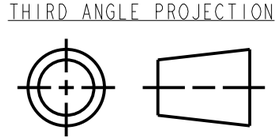

BANNER ENGINEERING CORP.
www.bannerengineering.com

TITLE

BT6 SERIES GLASS FIBER M6 THREAD VL

SIZE	DRAWING NO.	REV.
B	189693	B

SCALE 2:1 | SHEET 1 OF 1

CREO