MODEL NO.	"TL"	"AL"	"L"	"D"	P/N
BTA29S	1.5	1.1	108	.125	21470
BTA24S	1.5	1.1	48	.125	21326
BTA23SM600	1.5	1.1	36	.125	20388
BTA23SM.62	1.5	.62	36	.125	20052
BTA13S	1.5	1.1	36	.062	20195
BTA21.5S	1.5	1.1	18	.125	20163
BTA210S	1.5	1.1	120	.125	20290
BTA211S	1.5	1.1	132	.125	20291
BTA215S	1.5	1.1	180	.125	20341
BTA21S	1.5	1.1	12	.125	20806
BTA26S	1.5	1.1	72	.125	20377
BTA23S	1.5	1.1	36	.125	20008

NOTES:

1. 'M600' SUFFIX INDICATES FIBERS POTTED ON ANGLED END WITH EPOXY THAT OPERATES IN MAX. TEMPERATURE OF 600°F.

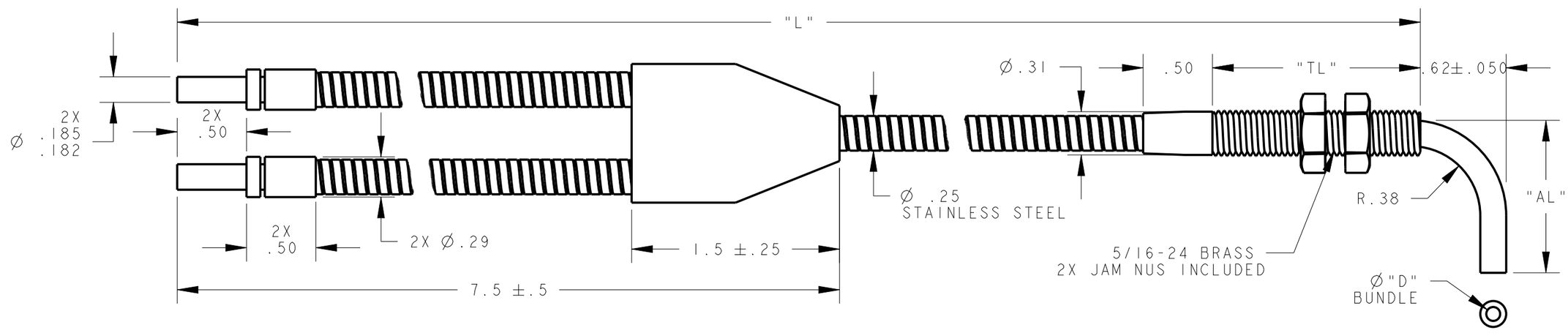

NOTES:
1. ALL DIMENSIONS ARE MILLIMETERS [INCHES] UNLESS OTHERWISE NOTED.
2. REFER TO "www.bannerengineering.com" FOR ADDITIONAL DATA AND SPECIFICATIONS.

This drawing is the property of BANNER ENGINEERING CORP. Any use or reproduction, in any form, without prior written permission of Banner is prohibited.
© 2015 Banner Engineering Corp.

THIRD ANGLE PROJECTION

BANNER ENGINEERING CORP.
www.bannerengineering.com

TITLE

BTA2 SERIES SS TERMINATED

SIZE	DRAWING NO.	REV.
B	161912	A
SCALE 5:4	SHEET 1 OF 2	

CREO

MODEL NO.	"TL"	"AL"	"L"	"D"	P/N
BTA13SM2.4	1.5	2.4	36	.062	23169
BTA12SM2.4	1.5	2.4	24	.062	00000
BTA.53S	1.5	1.1	36	.032	23240
BTA25SM600	1.5	1.1	60	.125	00000
BTA.53SM.62	1.5	.62	36	.032	23259
BTA12S	1.5	1.1	24	.062	23330
BTA.753S	1.5	1.1	36	.046	23562
BTA12.8S	1.5	1.1	33	.062	00000
BTA12.83S	1.5	1.1	34	.062	23777
BTA12.7S	1.5	1.1	32	.062	23778
BTA12.33S	1.5	1.1	28	.062	23779
BTA23S1.9	1.5	1.88	36	.125	23825
BTA13SMT.87M.62	.87	.62	36	.062	23839
BTA23SM.8	1.5	.8	36	.125	00000
BTA214SM.8	1.5	.8	168	.125	00000
BTA14S	1.5	1.1	48	.062	23883
BTA15S	1.5	1.1	60	.062	00000
BTA115S	1.5	1.1	180	.062	00000
BTA112S	1.5	1.1	144	.062	00000
BTA26SM600	1.5	1.1	72	.125	24273
BTA26SM.8	1.5	.8	72	.125	00000
BTA214S	1.5	1.1	168	.125	24465
BTA11S	1.5	1.1	12	.062	24475
BTA227S	1.5	1.1	324	.125	00000
BTA18S	1.5	1.1	96	.062	24597
BTA23SMAL1.5	1.5	1.5	36	.125	24914
BTA26SMAL1.5	1.5	1.5	72	.125	00000
BTA11.5S	1.5	1.1	18	.062	00000
BTA1.51.5S	1.5	1.1	18	.090	00000

MODEL NO.	"TL"	"AL"	"L"	"D"	P/N
BTA22S	1.5	1.1	24	.125	21895
BTA225S	1.5	1.1	300	.125	21879
BTA110S	1.5	1.1	120	.062	21710
BTA16S	1.5	1.1	72	.062	21705
BTA25S	1.5	1.1	60	.125	21473
BTA27S	1.5	1.1	84	.125	21472
BTA28S	1.5	1.1	96	.125	21471
BTA26SM.62	1.5	.62	72	.125	22967
BTA1.54S	1.5	1.1	48	.090	23060
BTA13S2.2	1.5	2.2	36	.062	00000
BTA230S	1.5	1.1	360	.125	82493
BTA1.52S	1.5	1.1	24	.090	00000
BTA13SM600	1.5	1.1	36	.062	22932
BTA25.5S	1.5	1.1	66	.125	22643
BTA225SM600	1.5	1.1	300	.125	21991

NOTES:
1. ALL DIMENSIONS ARE MILLIMETERS [INCHES] UNLESS OTHERWISE NOTED.
2. REFER TO "www.bannerengineering.com" FOR ADDITIONAL DATA AND SPECIFICATIONS.

NOTES:

1. 'M600' SUFFIX INDICATES FIBERS POTTED ON ANGLED END WITH EPOXY THAT OPERATES IN MAX. TEMPERATURE OF 600°F.

This drawing is the property of BANNER ENGINEERING CORP. Any use or reproduction, in any form, without prior written permission of Banner is prohibited.
© 2015 Banner Engineering Corp.

THIRD ANGLE PROJECTION

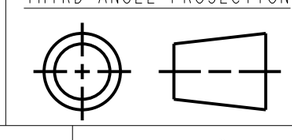

BANNER ENGINEERING CORP.
www.bannerengineering.com

TITLE

BTA2 SERIES SS TERMINATED

SIZE	DRAWING NO.	REV.
B	161912	A

SCALE 3:2 | SHEET 2 OF 2

CREO