REVISIONS					
REV	ECN	DESCRIPTION	DATE	BY	CHECKED
A	100183	SEE ECO	1/13/2014	DRW	MCP
B	100271	SEE ECO	5/5/2015	DRW	MCP

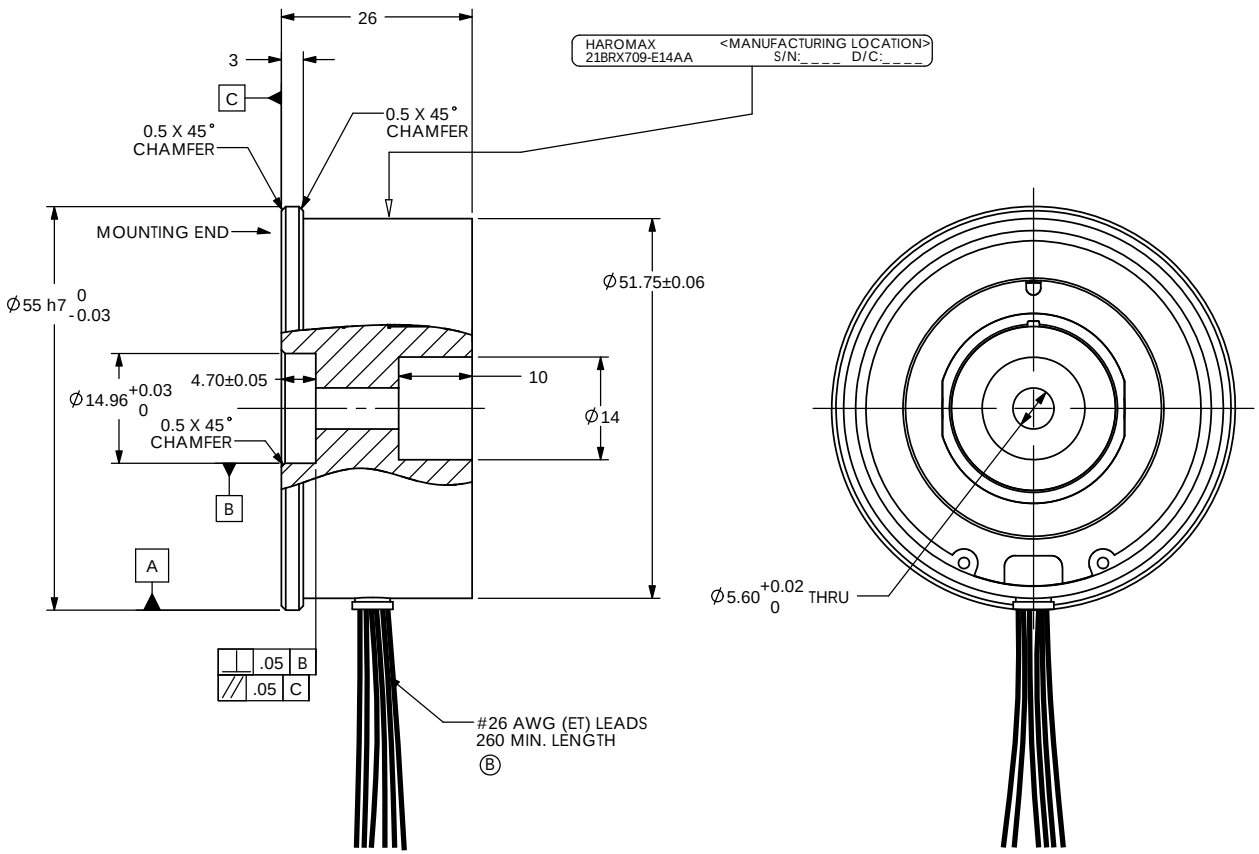

NOTES:

1. ROTOR & STATOR ARE A MATCHED SET - DO NOT ISSUE SEPARATLEY.
2. ROTOR AND STATOR TO BE MOUNTED AXIALLY FLUSH ±.25
3. CUSTOMER MUST MAINTAIN SHAFT RUNOUT WITH RESPECT TO DATUM 'A' WITHIN .075 T.I.R.

ELECTRICAL & MECHANICAL DATA AT 25°C		
VALUES ARE REFERENCE UNLESS OTHERWISE TOLERANCED		
HIPOT TESTING PERFORMED AT 60HZ, 4 SECOND DURATION		
ELEC CYC / MECH CYC	deg/deg	1
EXCITATION FREQUENCY	±1% kHz	6.0
INPUT VOLTAGE	±5% Vrms	6.0
INPUT CURRENT	Max. mArms	28
INPUT POWER	Watts	.065
IMPEDANCE |ZRO|	Ohms	252
IMPEDANCE |ZRS|	Ohms	219
IMPEDANCE |ZSO|	Ohms	193
IMPEDANCE |ZSS|	Ohms	166
TRANSFORMATION RATIO	±10%	.31
DC RESISTANCE (R1-R2)	Ohms	30
DC RESISTANCE (S1-S3, S2-S4)	Ohms	44
PK-PK POSITION ERROR	arcminutes	24
PHASE SHIFT, OPEN CIRCUIT	degrees	-8
NULL VOLTAGE	Max. mVrms	20
HIPOT, LEADS TO CASE, 500VAC	Max. mArms	2
HIPOT, INTERPHASE, 250VAC	Max. mArms	2
TEMPERATURE RANGE	°C	- 55 TO + 155
WEIGHT	g	128
CONTINUOUS SPEED	Max. kRPM	20

PHASING EQUATION

INCREASING ANGLE FOR CCW ROTATION AS VIEWED FROM MOUNTING END

E (S1-S3) = KE (R1-R2) COS∅
E (S2-S4) = KE (R1-R2) SIN∅

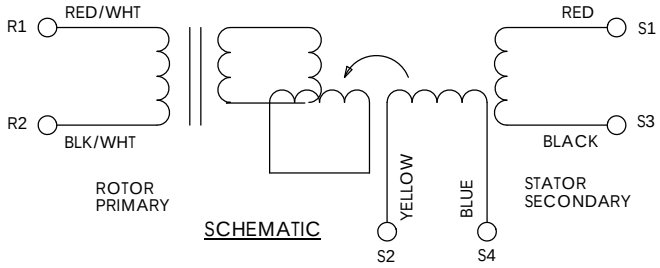

SCHEMATIC

METRIC DRAWING

THIRD ANGLE PROJECTION

THE INFORMATION CONTAINED IN THIS DRAWING IS THE SOLE PROPERTY OF HAROWE. ANY REPRODUCTION IN PART OR WHOLE WITHOUT THE WRITTEN PERMISSION OF HAROWE IS PROHIBITED.

UNLESS OTHERWISE SPECIFIED:
DIMENSIONS ARE IN MILLIMETERS
SHARP EDGES BROKEN .125/.255
INSIDE CORNERS R .38 MAX

APPROVALS	DATE
DRAWN SEW	05/31/09
CHECKED MCP	05/02/12
DES ENG SEW	05/31/09

INTERPRETATION PER ASME Y14.5M-1994

UNLESS OTHERWISE SPECIFIED:
TOLERANCES:
- DIMENSION ±0.1
- ANGLE ±0.5°
- CHAMFER ±10°

Harowe

OUTLINE & PERFORMANCE SPECIFICATION

RESOLVER BRUSHLESS FRAMELESS

SIZE B | DWG. NO. 21BRX709-E14AA

SCALE 1.5:1 | SHEET 1 OF 2 | CODE IDENT: 58655