KJ20-Q40KN-ANU

Pulsotronic GmbH & Co. KG Neue Schichtstraße 14b 09366 Niederdorf Deutschland +49 (0)37296 930-200

Article Page

Product Description: inductive sensor analogue

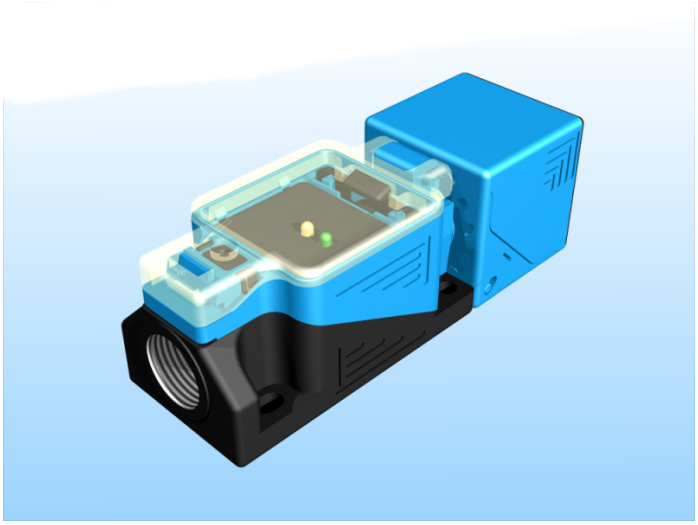

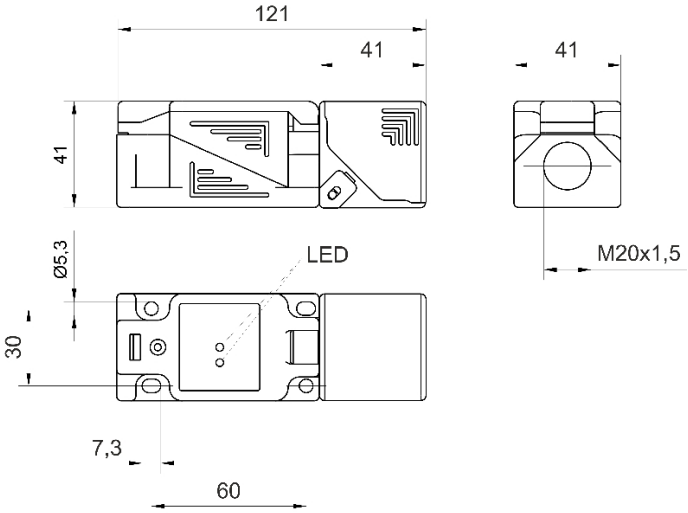

Name	KJ20-Q40KN-ANU
Order number	08317141100
Matchcode	9814-1100
Switching distance	from 10 mm to 20 mm
Mounting	non shielded
Switch type	analog
Signal Type	Analog Voltage
Connection	Terminal
Connection diagramm	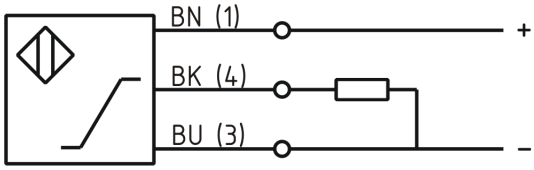
Dimension (in mm)	Q 40 x 40 x 120
Technical Specification	
Special features	Output Voltage 1 ... 9 Volt rotatable sensor head
Operating voltage	18 - 30 VDC
Max. ripple	≤ 10 %
No load current	≤ 10 mA
Switching frequency	25 Hz
Operating temperature	-25 ° C to 70 ° C
Temperature drift	+/- 10 %
Repeat accuracy	≤ 5 %
Linearity	≤ 3 %
Time delay	500 ms
Reverse voltage protection	yes
Protection category	IP67
EMC-level	DIN EN 60947-5-7:2004-06
Housing material	Trogamid
Material active face	Trogamid T
Utilisation category	DC 13
Nominal operating voltage	24 V DC
Termination	Terminal 1,5mm²
internalt load resistor	