Click to ORDER samples

AMA90D-Y

Desktop Adaptor

The AMA90D-Y is a small industrial grade desktop adapter offering a commercial input voltage range of 90-264VAC and an output power of 90W. This adapter will offer many benefits to powering your system such as low power consumption, high efficiency (complies with DoE level VI), meeting EN/IEC/UL62368-1, FCC, Class B, CISPR32, Class B.

It also features an isolation of 3000VAC for improved reliability and system safety and comes standard with output short circuit protection (OSCP) and output over-current protection (OCP).

Features

- Universal Input: 90 - 264VAC/47 - 63Hz
- Operating Temp: 0 °C to +45 °C
- High isolation voltage: 3000VAC
- Low ripple & noise, 300mV(p-p), max
- Output short circuit, over-current, over-voltage protection
- Regulated Output

Summary

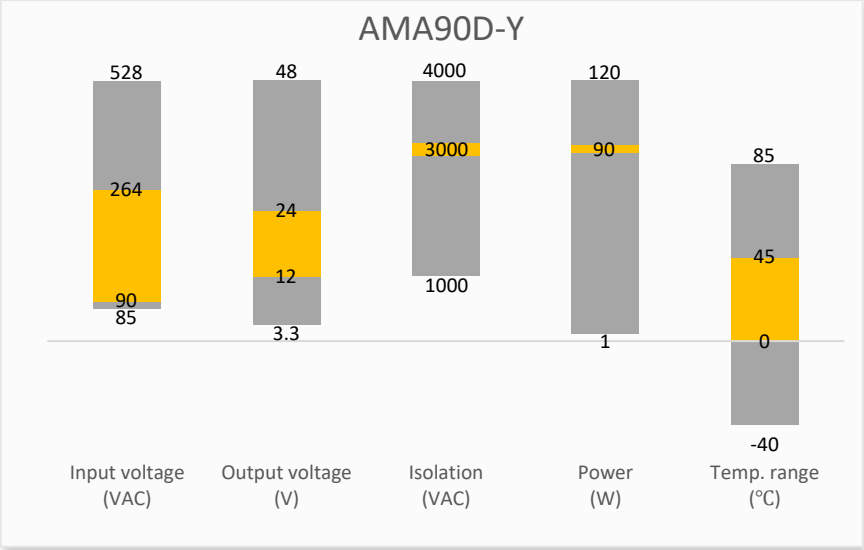

Training

Product Training Video (click to open)

Press Release

Coming Soon!

Application Notes

Applications

Portable Equipment

Industrial

Models & Specifications

General Feature					
Model	**Input Voltage (VAC)**	**Output Voltage (VDC)**	**Output Current max (A)**	**Output Power max (W)**	**Efficiency (%)**
AMA90D-120075Y	90 - 264	12	7.50	90	88
AMA90D-190047Y	90 - 264	19	4.74	90	88
AMA90D-240037Y	90 - 264	24	3.75	90	88
Please refer to below coding rule for completed part numbers. Eg. AMA90DR5-190047Y for industrial grade desktop type adaptor which comes with 5.5mm*2.5mm*9.5mm straight standard output plug.					

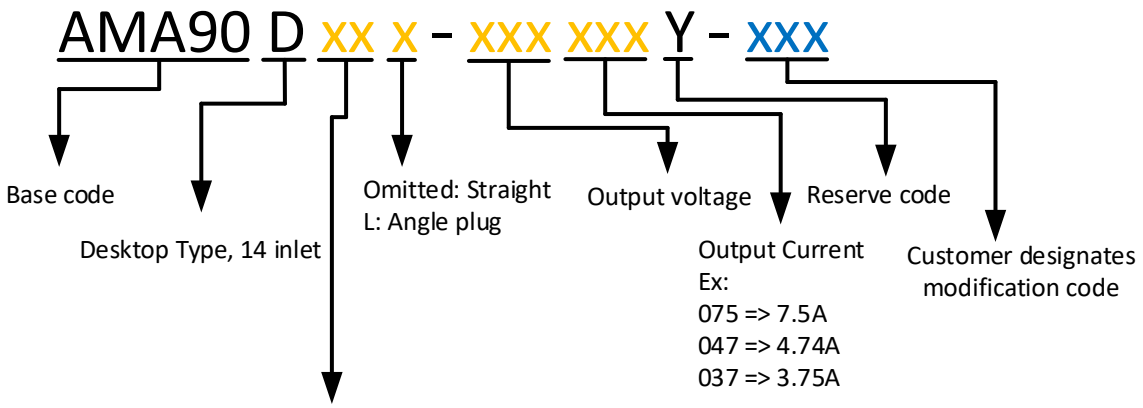

Plug type	Code	O. D.	I. D.	Length
Standard	R4	5.5mm	2.1mm	9.5mm
	R5	5.5mm	2.5mm	9.5mm
Locking	K1	5.5mm	2.1mm	9.5mm
	K2	5.5mm	2.5mm	9.5mm
DIN	D1	DIN 4 Connector (For 24V output models only)		
USB	U2	* USB type C (For 19V output models only)		
* NOTE: The USB type C connector option is only a physical USB type-C connector which does not support PD and programmable power supply.				

Input Specification					
Parameters	**Conditions**	**Minimum**	**Typical**	**Maximum**	**Units**
Voltage range		90	100 - 240	264	VAC
Frequency		47	50 - 60	63	Hz
Input current	Vin at 100 -240VAC			1.8	A
Leakage Current	240VAC/50Hz			0.25	mA
Power factor	Vin at 115VAC/60Hz	90			%
	Vin at 230VAC/50Hz	85			%

Output Specification

Parameters	Conditions	Minimum	Typical	Maximum	Units
Output voltage	12VDC output		12		VDC
	19VDC output		19		
	24VDC output		24		
Output current	12VDC output	0		7.50	A
	19VDC output	0		4.74	
	24VDC output	0		3.75	
Voltage regulation				±5	%
Line regulation				±1	%
Load regulation				±5	%
Dynamic load	50% to 100% step change, 100Hz & 1KHz 50%duty, Slew rate 0.5A uS			±5	%
Over shoot				10	%
Ripple and Noise	20 MHz bandwidth			300	mVp-p
Start-up time	Nominal input			3	S
Hold-up time	Vin at 115VAC/60Hz	8			mS
Ripple and Noise are measured at 20MHz bandwidth by using a 0.1uF (M/C) and 10uF (E/C) parallel capacitor.					

Isolation Specifications

Parameters	Conditions	Typical	Rated	Units
Tested I/O voltage	60 sec, leakage current < 10mA, I/O		3000	VAC
	3 sec, leakage current < 10mA, I&O/PE		1500	
Resistance	500VDC	50		MΩ

General Specification

Parameters	Conditions	Minimum	Typical	Maximum	Units
Operating temperature		0		45	ºC
Storage temperature		-20		85	ºC
Power consumption	Vin at 100 -240VAC, no load			210	mW
Humidity	Non-condensing	10		90	% RH
Altitude		0		2640	m
DOE LEVEL	VI				
Over voltage protection	12VDC output			20	V
	19VDC output			27	
	24VDC output			36	
Over current protection	Continuous, auto recovery				
Short circuit protection	Continuous, auto recovery				

Vibration	1.0mm, 10-55Hz, 15 minutes per cycle for each axis (X,Y,Z)
Dimensions (L x W x H)	6.38 x 2.73 x 1.33 inches (162.00 x 69.30 x 33.8mm)
Output cable length	59.06 inches (1500mm)
MTBF	> 100 000 hrs (Telcordia SR332, t=+25°C)/Full Load
All specifications in this datasheet are measured at an ambient temperature of 25°C, humidity<75%, nominal input voltage and at rated output load unless otherwise specified.	

Safety Specifications		
Parameters		
Agency approvals	cULus UL62368-1, CE EN62368-1	
Standards	Information technology Equipment	Designed to meet IEC 62368-1
	EMC - Radiated & Conducted emission	FCC, Class B CISPR32, Class B
	Electrostatic Discharge Immunity	IEC 61000-4-2 Level 2: Contact ±4KV Level 3: Air ±8KV
	RF, Electromagnetic Field Immunity	IEC 61000-4-3 Level 2: Field strength 3V/m
	Electrical Fast Transient/Burst Immunity	IEC 61000-4-4 Level 2: ±1KV
	Surge Immunity	IEC 61000-4-5 Level 3: L-L ±1KV, L-G & N-G ±2KV
	CS, Conducted Disturbance Immunity	IEC 61000-4-6 Level 2: 3V/M
	MF	IEC 61000-4-8 Level 1: Magnetic strength 1A/M(r.m.s)
	Voltage dips, Short Interruptions Immunity	IEC 61000-4-11 0% 250 cycle, 40% 5 cycle, 70% 0.5 cycle

Dimensions

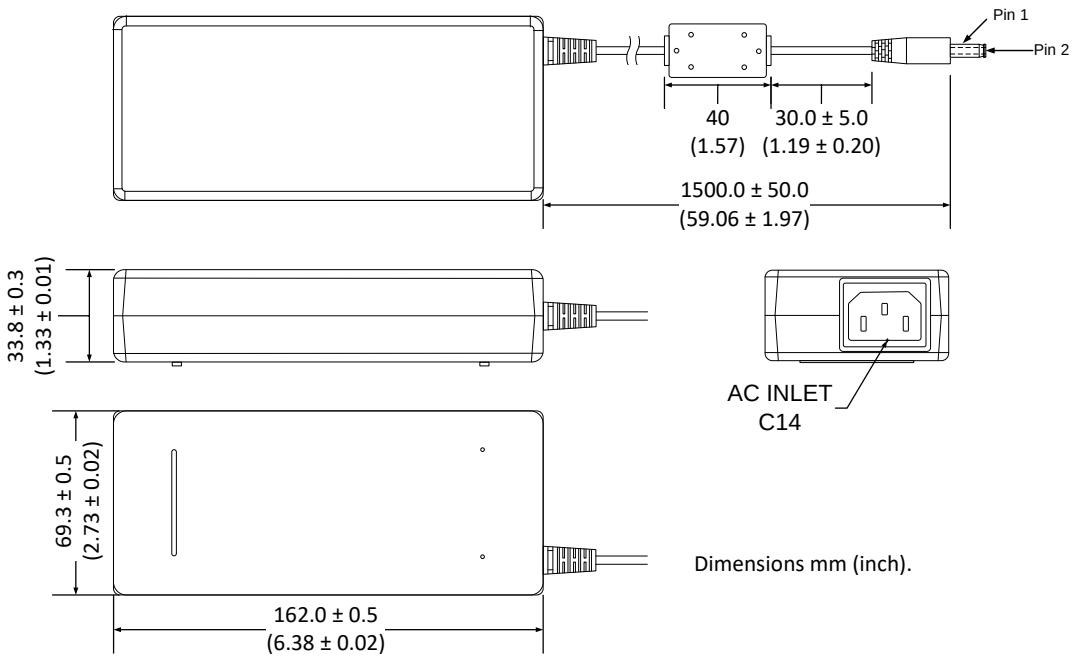

Dimensions mm (inch).

Pin Output Specifications	
Pin	Output Level
1	RTN(-)
2	+Vout

Optional DIN 4 Connector:

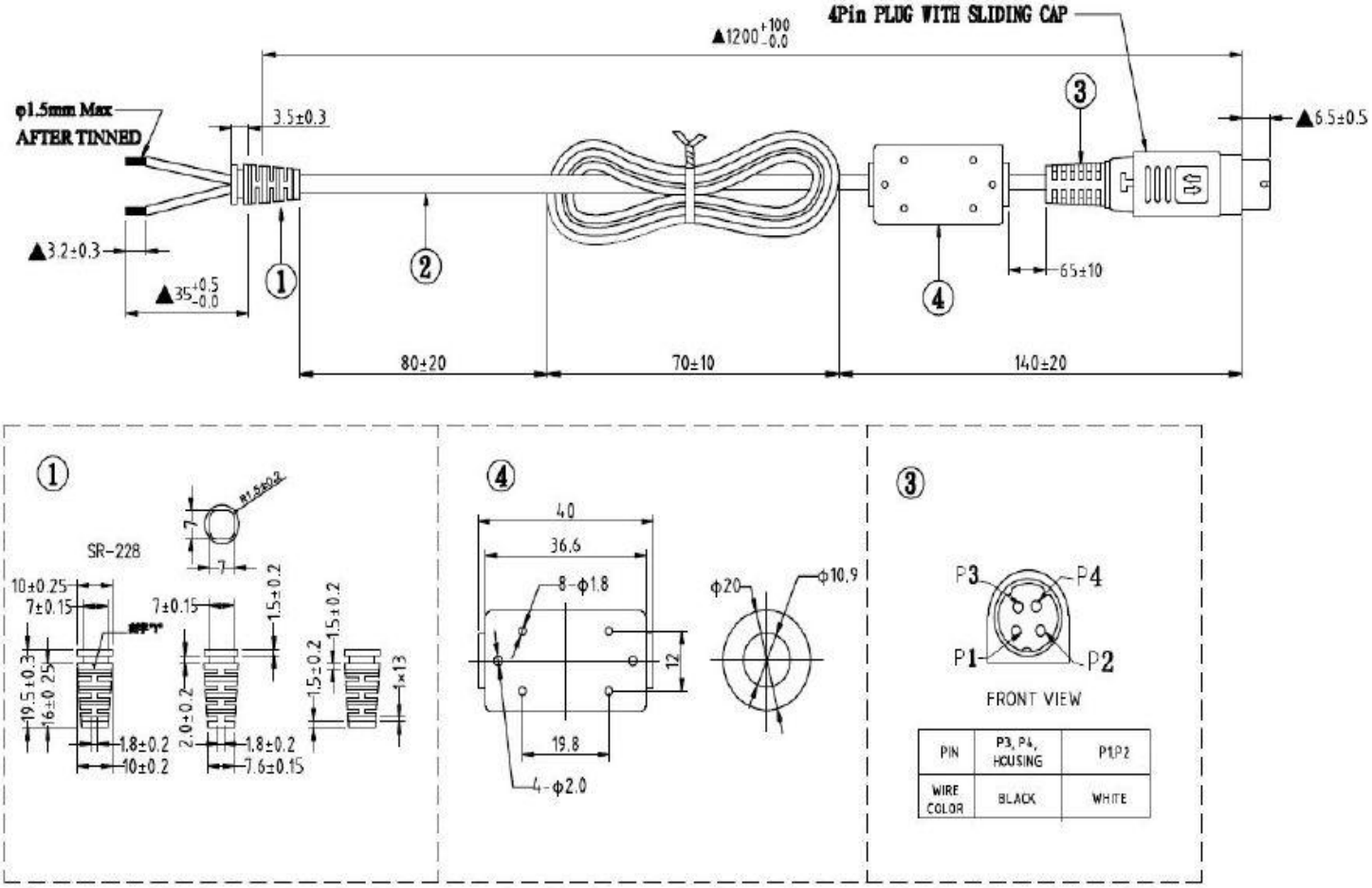

Optional USB Connector:

USB TYPE-C Connector

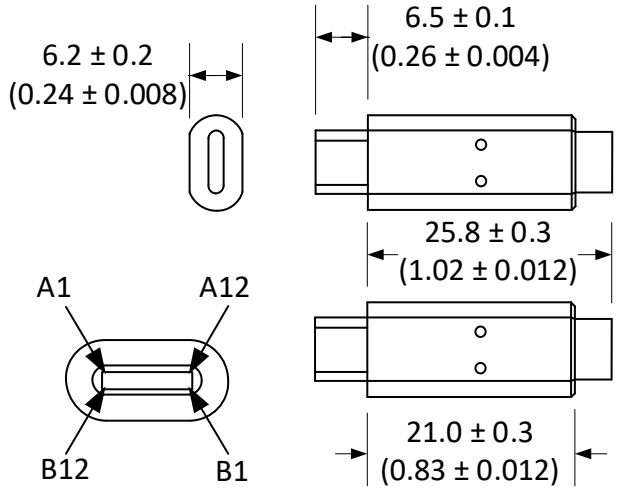

Pin Out Configurations	
Pin No.	**Description**
A4, A9, B4, B9	+Vout (VBUS)
A1, A12, B1, B12, Shell	RTN (-) (GND)
A5	CC
Others	Omitted

Optional Barrel Locking Type Connector:

K1 Connector

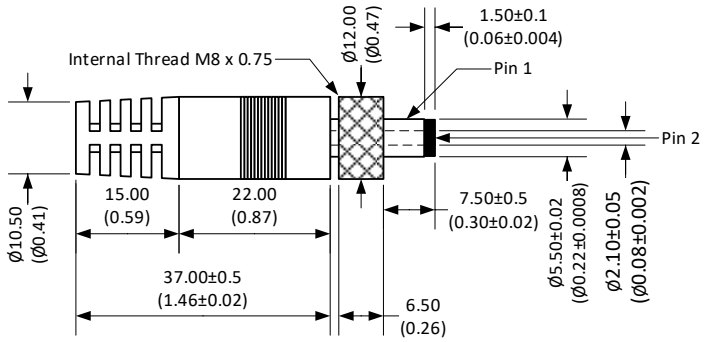

Pin Out Configurations	
Pin No.	**Description**
1	RTN(-)
2	+Vout

K2 Connector

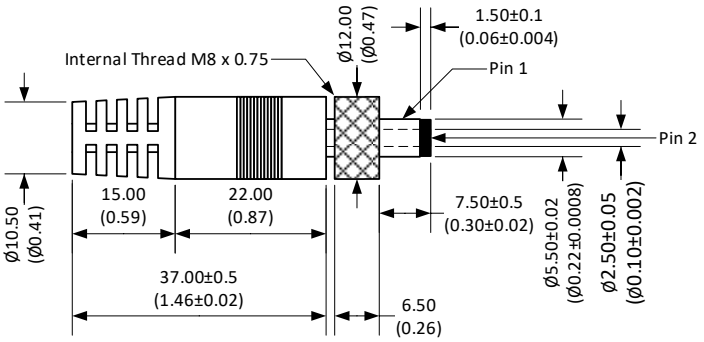

Pin Out Configurations	
Pin No.	**Description**
1	RTN(-)
2	+Vout

NOTE:

1. USB TYPE-C connector: Limited maximum output voltage of 20V, and maximum output current of 5A.

Packing

For US and European Plug:

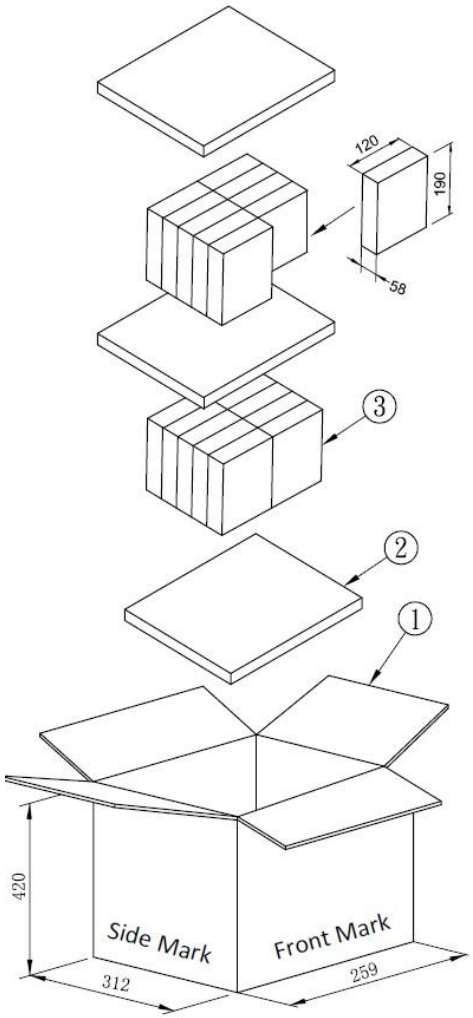

Packing information:

- CARTON : L*W*H=(312*259*420) +/-5mm K=K
- CLAPBOARD : (290*240) +/-3mm A=A 3PCS
- WHITE BOX : 190*120*58 C9
- Q'TY : 10*2=20PCS
- NET WEIGHT : (g)(ref)
- UNIT : mm

NOTE: 1. Datasheets are updated as needed and as such, specifications are subject to change without notice. Once printed or downloaded, datasheets are no longer controlled by Aimtec; refer to www.aimtec.com for the most current product specifications. **2.** Product labels shown, including safety agency certifications on labels, may vary based on the date manufactured. **3.** Mechanical drawings and specifications are for reference only. **4.** All specifications are measured at an ambient temperature of 25°C, humidity<75%, nominal input voltage and at rated output load unless otherwise specified. **5.** Aimtec may not have conducted destructive testing or chemical analysis on all internal components and chemicals at the time of publishing this document. CAS numbers and other limited information are considered proprietary and may not be available for release. **6.** This product is not designed for use in critical life support systems, equipment used in hazardous environments, nuclear control systems or other such applications which necessitate specific safety and regulatory standards other the ones listed in this datasheet. **7.** Warranty is in accordance with Aimtec's standard Terms of Sale available at www.aimtec.com. **8.** Adaptors are intended for industrial use only.