REVISIONS				
SYM	DESCRIPTION	REVISED BY	DATE	APPR

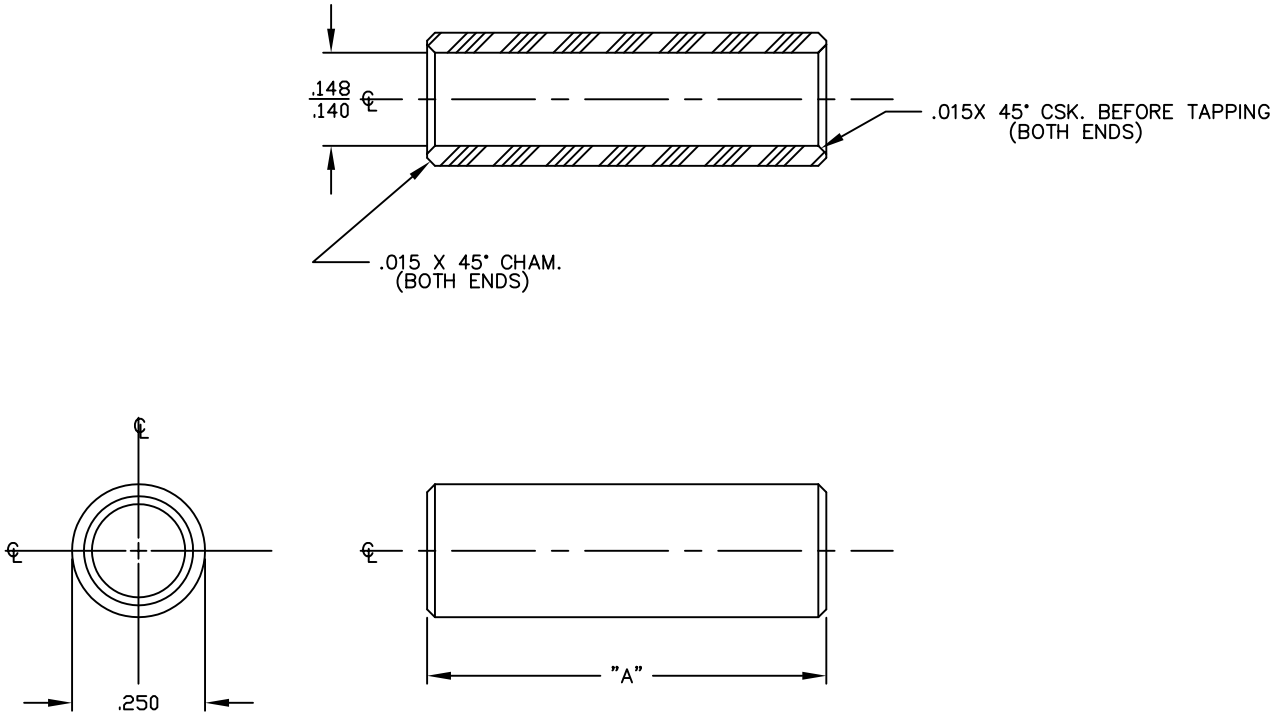

SPACERS	
PART NO.	DIM "A"
8500	.125
9207	.187
8501	.250
9208	.312
8502	.375
9209	.437
8503	.500
9210	.562
8504	.625
9211	.687
8505	.750
9212	.812
8506	.875
9213	.937
8507	1.000
8500R	1.125
8508	1.250
8500T	1.375
8509	1.500
8500V	1.625
8510	1.750
8500X	1.875
8511	2.000

MATERIAL ALUMINUM ALLOY 2011 T3

FINISH CLEAR CHROMATE

DIMENSIONAL TOLERANCES
UNLESS OTHERWISE SPECIFIED

.XX	.XXX	.XXXX
— — —	— — —	— — —
FRACTIONS	ANGLES	SCALE
— — —	— — —	4:1

HEAT TREAT — — —

PLOT SCALE: 1=1

TITLE
ALUMINUM ROUND 1/4"
SPACERS
#6 CLEARANCE

DRAWN: T. LORD DATE 02/10/03
CHECKED: T. LORD DATE 02/10/03
APPROVED: T. LORD DATE 02/10/03

ABBATRON
Electronic Connectors and Hardware
632 Arch Street, Meadville, Pa. 16335

SIZE	DRAWING NUMBER	ISSU
B	SMP-00406	B